LA-2411

Compal confidential

Schematics Document

DT TRANSPORT or Prescott uFCPGA
with ATI-RC300M+SB200 core logic

2004-06-08

REV:0.2

THIS SHEET OF ENGINEERING DRAWING IS THE PROPRIETARY PROPERTY OF COMPAL ELECTRONICS, INC. AND CONTAINS CONFIDENTIAL AND TRADE SECRET INFORMATION. THIS SHEET MAY NOT BE TRANSFERED FROM THE CUSTODY OF THE COMPETENT DIVISION OF R&D DEPARTMENT EXCEPT AS AUTHORIZED BY COMPAL ELECTRONICS, INC. NEITHER THIS SHEET NOR THE INFORMATION IT CONTAINS MAY BE USED BY OR DISCLOSED TO ANY THIRD PARTY WITHOUT PRIOR WRITTEN CONSENT OF COMPAL ELECTRONICS, INC.

Compal Electronics, Inc.		
Title: Cover Sheet		
Size	Document Number: LA-2411	Rev 0.1
Date: Tuesday, June 08, 2004	Sheet 1 of 65	

Compal confidential

File Name :LA2411

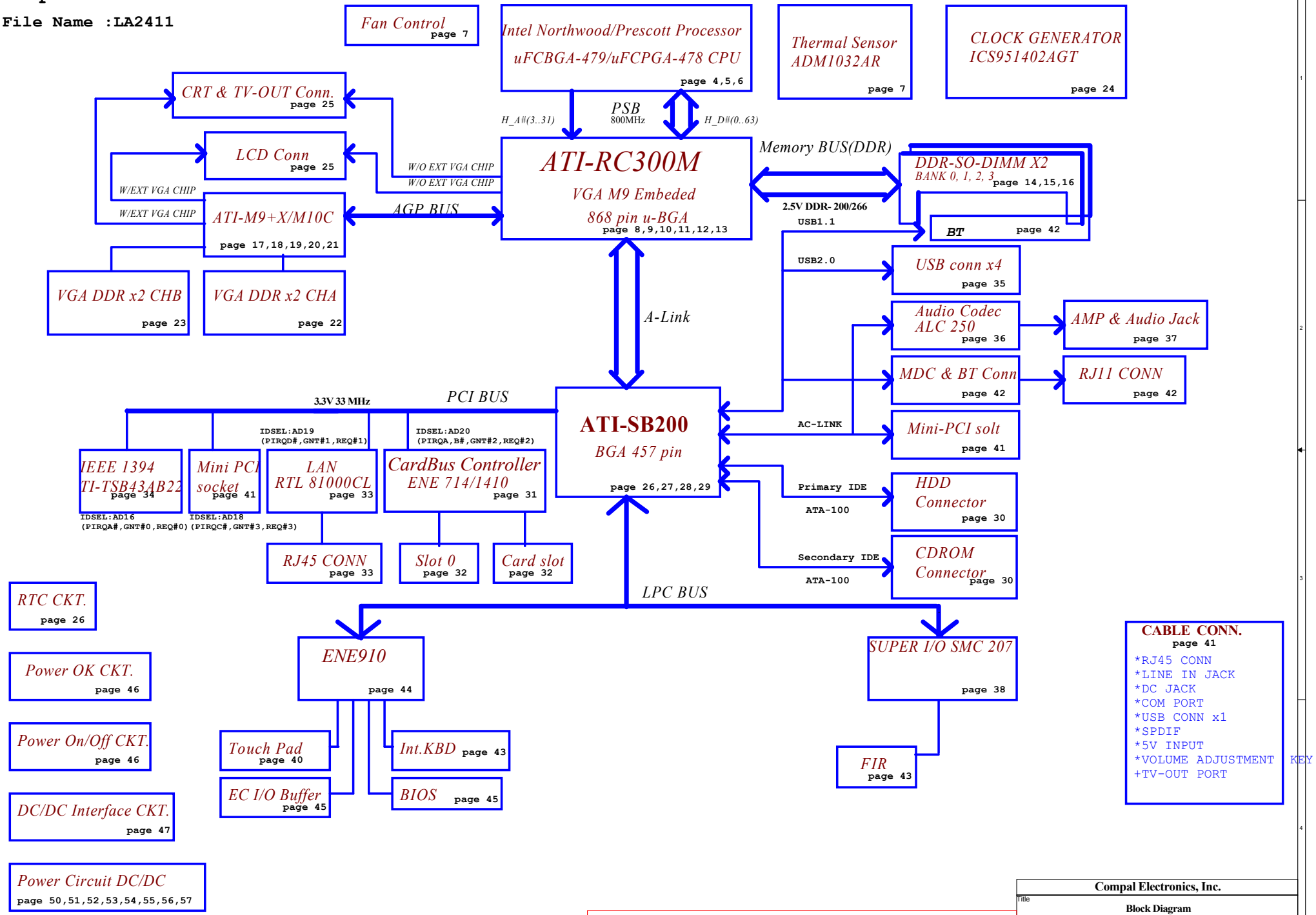

THIS SHEET OF ENGINEERING DRAWING IS THE PROPRIETARY PROPERTY OF COMPAL ELECTRONICS, INC. AND CONTAINS CONFIDENTIAL AND TRADE SECRET INFORMATION. THIS SHEET MAY NOT BE TRANSFERED FROM THE CUSTODY OF THE COMPETENT DIVISION OF R&D DEPARTMENT EXCEPT AS AUTHORIZED BY COMPAL ELECTRONICS, INC. NEITHER THIS SHEET NOR THE INFORMATION IT CONTAINS MAY BE USED BY OR DISCLOSED TO ANY THIRD PARTY WITHOUT PRIOR WRITTEN CONSENT OF COMPAL ELECTRONICS, INC.

Compal Electronics, Inc.			
Title	Block Diagram		
Size	Document Number LA-2411		Rev 0.1
Date: Tuesday, June 08, 2004	Sheet 2 of 65		

Voltage Rails

Power Plane	Description	S0-S1	S3	S5
VIN	Adapter power supply (19V)	N/A	N/A	N/A
B+	AC or battery power rail for power circuit.	N/A	N/A	N/A
+VCC_CORE	Core voltage for CPU	ON	OFF	OFF
+VCCVID	The voltage for Processor VID select	ON	OFF	OFF
+1.25VS	1.25V switched power rail for DDR Vtt	ON	OFF	OFF
+1.2VS_VGA	1.2V I/O power rail for ATI-VGA M9+X/M10P.	ON	OFF	OFF
+1.5VS	1.5V I/O power rail for ATI-RS300M/RC300M NB AGP.	ON	OFF	OFF
+1.8VS	1.8V switched power rail for ATI-RS300M/RC300M NB.	ON	OFF	OFF
+2.5VALW	2.5V always on power rail	ON	ON	ON*
+2.5V	2.5V system power rail for DDR	ON	ON	OFF
+2.5VS	2.5V switched power rail	ON	OFF	OFF
+3VALW	3.3V always on power rail	ON	ON	ON*
+3V	3.3V system power rail for SB,LAN,CardReader and HUB.	ON	ON	OFF
+3VS	3.3V switched power rail	ON	OFF	OFF
+5VALW	5V always on power rail	ON	ON	ON*
+5V	5V system power rail .	ON	ON	OFF
+5VS	5V switched power rail	ON	OFF	OFF
+12VALW	12V always on power rail	ON	ON	ON*
RTCVCC	RTC power	ON	ON	ON

Note : ON* means that this power plane is ON only with AC power available, otherwise it is OFF.

External PCI Devices

DEVICE	IDSEL #	REQ/GNT #	PIRQ
NB Internal VGA	N/A	N/A	A
AGP BUS	AGP_DEVSEL	N/A	A
SOUTHBRIDGE	AD31 (INT.)	N/A	N/A
USB	AD30 (INT.)	N/A	D
AC97	AD31 (INT.)	N/A	B
ATA 100	AD31 (INT.)	N/A	A
ETHERNET	AD24(INT.)	N/A	C
1394	AD16	0	A
LAN	AD19	1	D
CARD BUS	AD20	2	A.B
Wireless LAN(MINI PCI)	AD18	3	C

I2C / SMBUS ADDRESSING

DEVICE	HEX	ADDRESS
DDR SO-DIMM 0	A0	1 0 1 0 0 0 0 X
DDR SO-DIMM 1	A2	1 0 1 0 0 0 1 X
CLOCK GENERATOR (EXT.)	D2	1 1 0 1 0 0 1 X

Symbol Note :

: means Digital Ground

: means Analog Ground

@ : means just reserve , no build

NAGP@ : means just build when no external AGP VGA chip build in (UMA).
M10@ : means build VGA M10
M9@ : means build VGA M9+X
M9-M10@ : means build VGA M9 or M10
1520@ : means build Cardbus PCI1520
1620@ : means build Cardbus PCI1620
ATI@ : means build ATI SB USB2.0 related to turn on the function .
NEC@ : means build NEC USB2.0 related to turn on the function .

Board ID Table for AD channel

Vcc	3.3V +/- 5%
Ra	100K +/- 5%

Board ID	Rb	V_{AD_BID} min	V_{AD_BID} typ	V_{AD_BID} max
0	0	0 V	0 V	0 V
1	8.2K +/- 5%	0.216 V	0.250 V	0.289 V
2	18K +/- 5%	0.436 V	0.503 V	0.538 V
3	33K +/- 5%	0.712 V	0.819 V	0.875 V
4	56K +/- 5%	1.036 V	1.185 V	1.264 V
5	100K +/- 5%	1.453 V	1.650 V	1.759 V
6	200K +/- 5%	1.935 V	2.200 V	2.341 V
7	NC	2.500 V	3.300 V	3.300 V

Board ID	PCB Revision
0	0.1
1	
2	
3	
4	
5	
6	
7	

THIS SHEET OF ENGINEERING DRAWING IS THE PROPRIETARY PROPERTY OF COMPAL ELECTRONICS, INC. AND CONTAINS CONFIDENTIAL AND TRADE SECRET INFORMATION. THIS SHEET MAY NOT BE TRANSFERED FROM THE CUSTODY OF THE COMPETENT DIVISION OF R&D DEPARTMENT EXCEPT AS AUTHORIZED BY COMPAL ELECTRONICS, INC. NEITHER THIS SHEET NOR THE INFORMATION IT CONTAINS MAY BE USED BY OR DISCLOSED TO ANY THIRD PARTY WITHOUT PRIOR WRITTEN CONSENT OF COMPAL ELECTRONICS, INC.

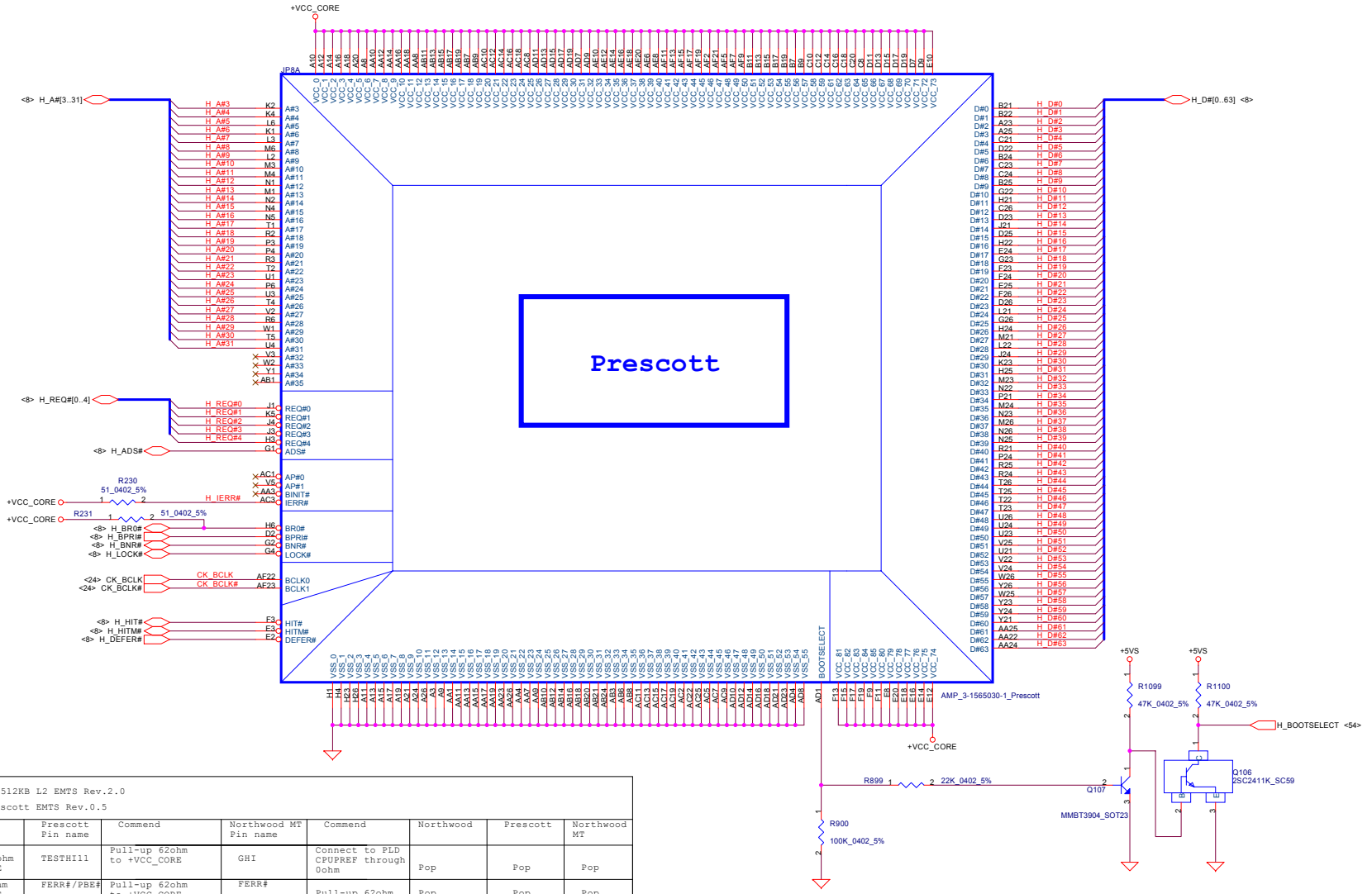

Reference Intel document
Desktop P4 Spec.: 10988 P4 0.13u 512KB L2 EMTS Rev.2.0

Desktop Prescott Spec.: 11910 Prescott EMTS Rev.0.5

Pin number	Northwood Pin name	Commend	Prescott Pin name	Commend	Northwood MT Pin name	Commend	Northwood	Prescott	Northwood MT
A6	TESTHI11	Pull-up 200ohm to +VCC_CORE	TESTHI11	Pull-up 62ohm to +VCC_CORE	GHI	Connect to PLD CPUPREF through 0ohm	Pop	Pop	Pop
B6	FERR#	Pull-up 62ohm to +VCC_CORE	FERR#/PBE#	Pull-up 62ohm to +VCC_CORE	FERR#	Pull-up 62ohm to +VCC_CORE	Pop	Pop	Pop
AA20	ITPCLKOUT0	Pull-up56ohm to +VCC_CORE	TESTHI6	Pull-up 62ohm to +VCC_CORE	ITPCLKOUT0	Pull-up56ohm to +VCC_CORE	Pop	Pop	Pop
AB22	ITPCLKOUT1	Pull-up 56ohm to +VCC_CORE	TESTHI7	Pull-up 62ohm to +VCC_CORE	ITPCLKOUT1	Pull-up 56ohm to +VCC_CORE	Pop	Pop	Pop
AD2	NC	float	VIDPWRGD	Pull-up 2.43K ohm to +VCCVID	NC	float	Depop	Pop	Depop
AD3	NC	float	VID5	Pull-up1Kohm to +3VRUN & connect to PWRIC	NC	float	Depop	Pop	Depop
AF3	NC	float	VCCVIDLB	Connect to +VCCVID	NC	float	Depop	Pop	Depop
AE23	VCCA	Connect to CPU Filter	VCCIOPLL	Connect to CPU Filter	VCCA	Connect to CPU Filter			
AD20	VCCIOPLL	Connect to CPU Filter	VCCA	Connect to CPU Filter	VCCIOPLL	Connect to CPU Filter			
AD1	VSS	Connect to GND	BOOTSELECT	CPU determine	VSS	Connect to GND	Pop	Depop	Pop
AE26	VSS	Connect to GND	OPTIMIZED/ COMPAT#	float	VSS	Connect to GND	Pop	Depop	Pop
AD25	TESTHI12	Pull-up 200ohm to +VCC_CORE	TESTHI12	Pull-up 62ohm to +VCC_CORE	DPSLP	Connect to PLD through 0ohm	Pop	Pop	Pop

THIS SHEET OF ENGINEERING DRAWING IS THE PROPRIETARY PROPERTY OF COMPAL ELECTRONICS, INC. AND CONTAINS CONFIDENTIAL AND TRADE SECRET INFORMATION. THIS SHEET MAY NOT BE TRANSFERED FROM THE CUSTODY OF THE COMPETENT DIVISION OF R&D DEPARTMENT EXCEPT AS AUTHORIZED BY COMPAL ELECTRONICS, INC. NEITHER THIS SHEET NOR THE INFORMATION IT CONTAINS MAY BE USED BY OR DISCLOSED TO ANY THIRD PARTY WITHOUT PRIOR WRITTEN CONSENT OF COMPAL ELECTRONICS, INC.

Compal Electronics, Inc.

Title: **Prescott Processor in uFCPGA478**

Size | Document Number: **LA-2411** | Rev: 0.1

Date: Tuesday, June 08, 2004 | Sheet 4 of 65

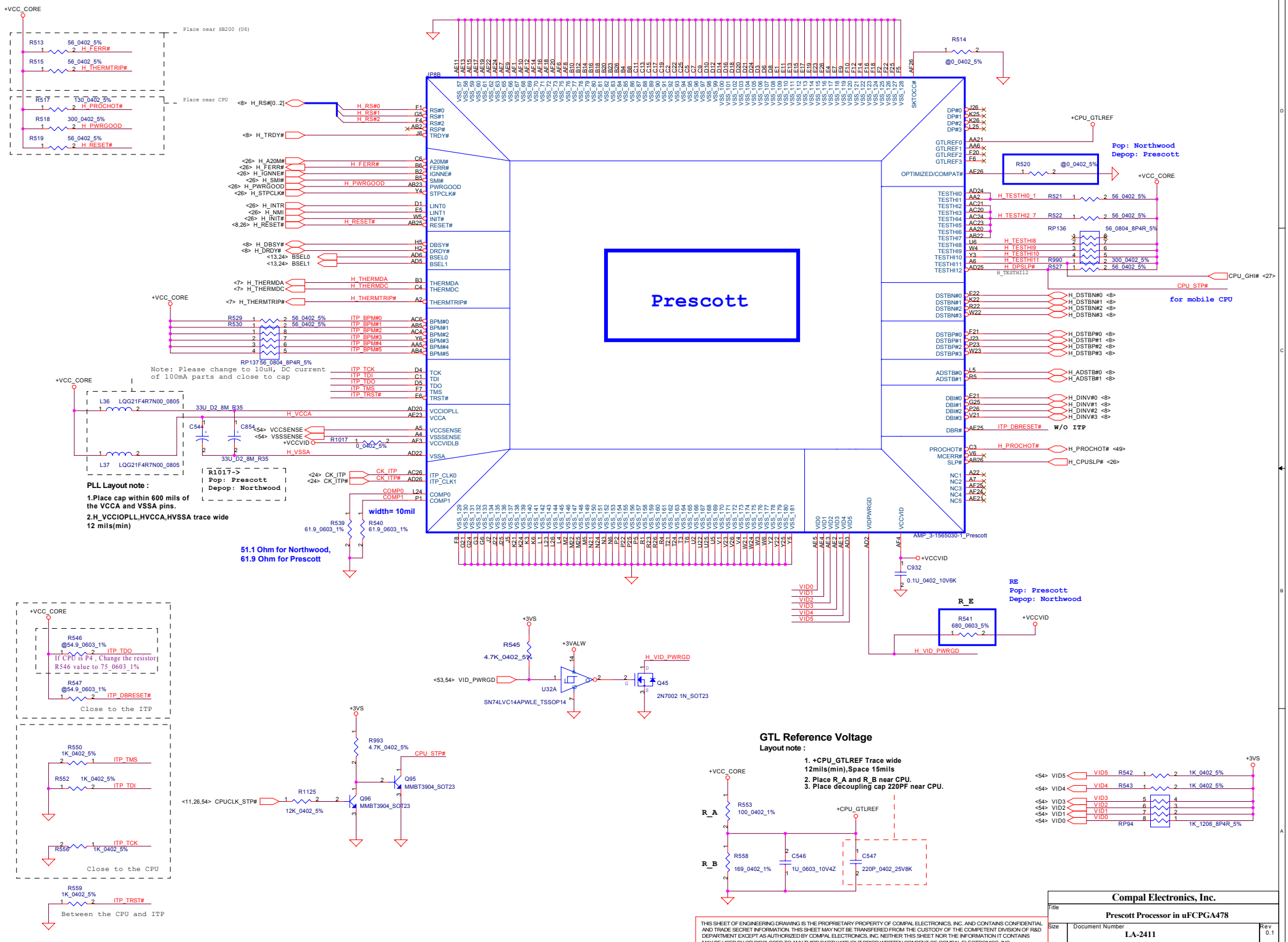

THIS SHEET OF ENGINEERING DRAWING IS THE PROPRIETARY PROPERTY OF COMPAL ELECTRONICS, INC. AND CONTAINS CONFIDENTIAL AND TRADE SECRET INFORMATION. THIS SHEET MAY NOT BE TRANSFERED FROM THE CUSTODY OF THE COMPETENT DIVISION OF R&D DEPARTMENT EXCEPT AS AUTHORIZED BY COMPAL ELECTRONICS, INC. NEITHER THIS SHEET NOR THE INFORMATION IT CONTAINS MAY BE USED BY OR DISCLOSED TO ANY THIRD PARTY WITHOUT PRIOR WRITTEN CONSENT OF COMPAL ELECTRONICS, INC.

Compal Electronics, Inc.	
Title	Prescott Processor in uFCPGA478
Size	Document Number: LA-2411 — Rev 0.1
Date: Tuesday, June 08, 2004	Sheet 5 of 65

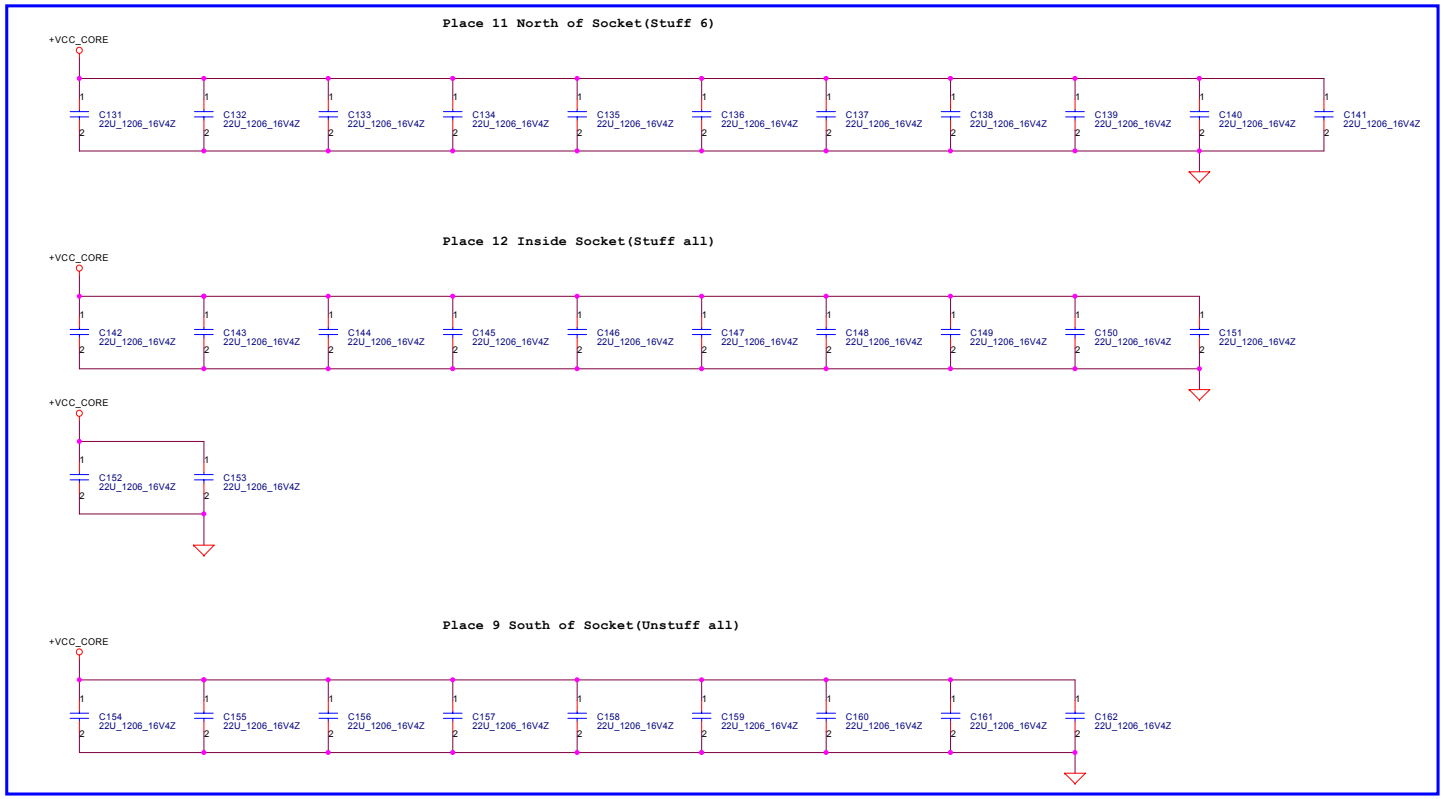

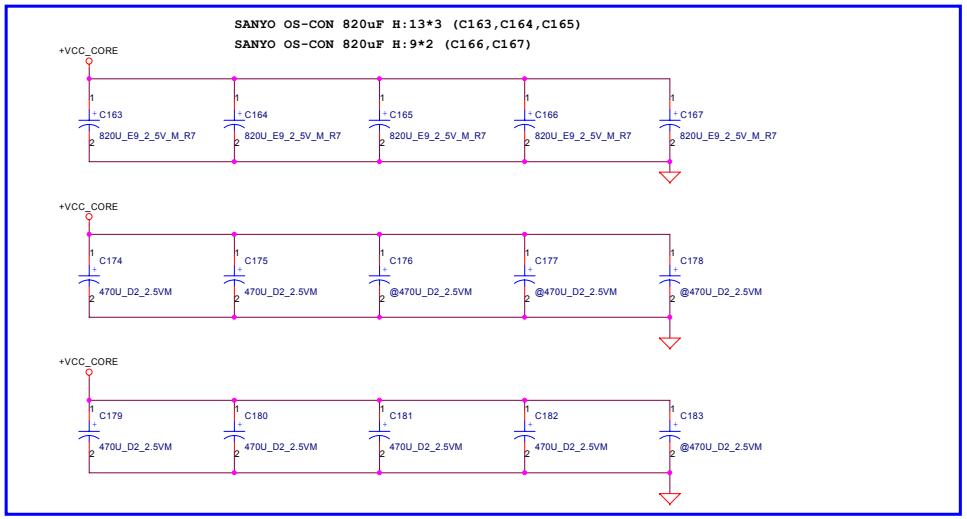

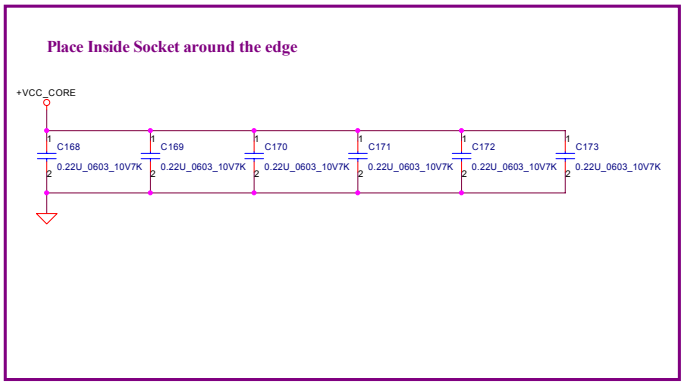

THIS SHEET OF ENGINEERING DRAWING IS THE PROPRIETARY PROPERTY OF COMPAL ELECTRONICS, INC. AND CONTAINS CONFIDENTIAL AND TRADE SECRET INFORMATION. THIS SHEET MAY NOT BE TRANSFERED FROM THE CUSTODY OF THE COMPETENT DIVISION OF R&D DEPARTMENT EXCEPT AS AUTHORIZED BY COMPAL ELECTRONICS, INC. NEITHER THIS SHEET NOR THE INFORMATION IT CONTAINS MAY BE USED BY OR DISCLOSED TO ANY THIRD PARTY WITHOUT PRIOR WRITTEN CONSENT OF COMPAL ELECTRONICS, INC.

Compal Electronics, Inc.		
Title: CPU Decoupling		
Size	Document Number: LA-2411	Rev 0.1
Date: Tuesday, June 08, 2004	Sheet 6 of 65	

Thermal Sensor ADM1032AR

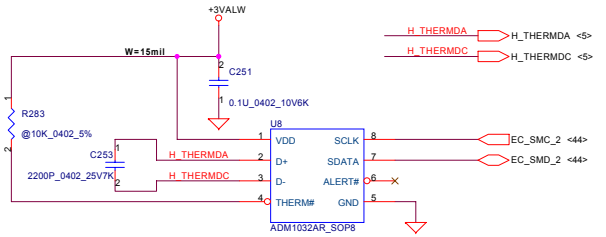

Address:1001_100X

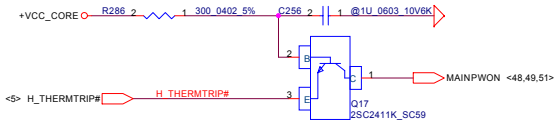

FAN CONN.1

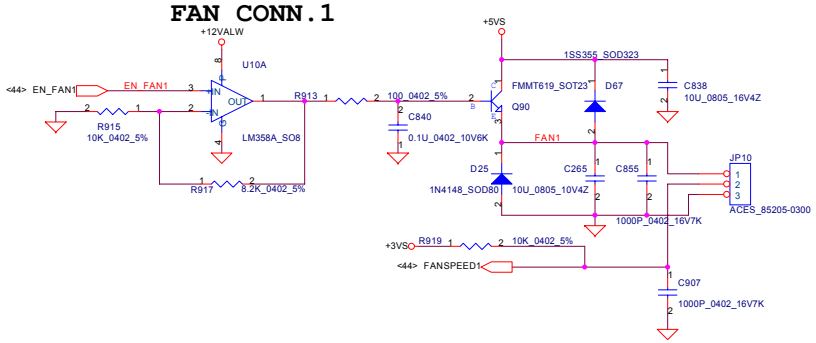

FAN CONN. 2

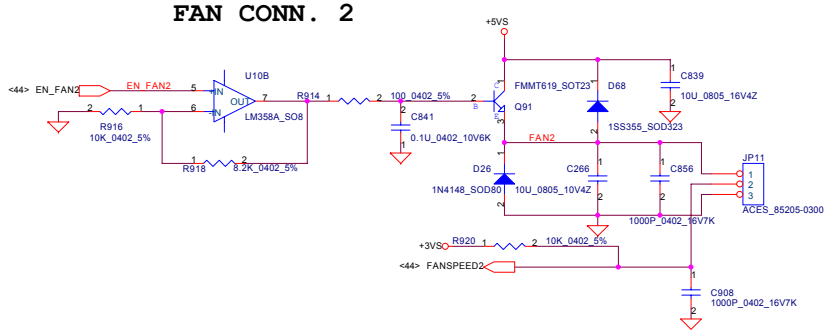

THIS SHEET OF ENGINEERING DRAWING IS THE PROPRIETARY PROPERTY OF COMPAL ELECTRONICS, INC. AND CONTAINS CONFIDENTIAL AND TRADE SECRET INFORMATION. THIS SHEET MAY NOT BE TRANSFERED FROM THE CUSTODY OF THE COMPETENT DIVISION OF R&D DEPARTMENT EXCEPT AS AUTHORIZED BY COMPAL ELECTRONICS, INC. NEITHER THIS SHEET NOR THE INFORMATION IT CONTAINS MAY BE USED BY OR DISCLOSED TO ANY THIRD PARTY WITHOUT PRIOR WRITTEN CONSENT OF COMPAL ELECTRONICS, INC.

Compal Electronics, Inc.		
Title: CPU Thermal Sensor&FAN CTRL		
Size	Document Number: LA-2411	Rev 0.1
Date: Tuesday, June 08, 2004	Sheet 7 of 65	

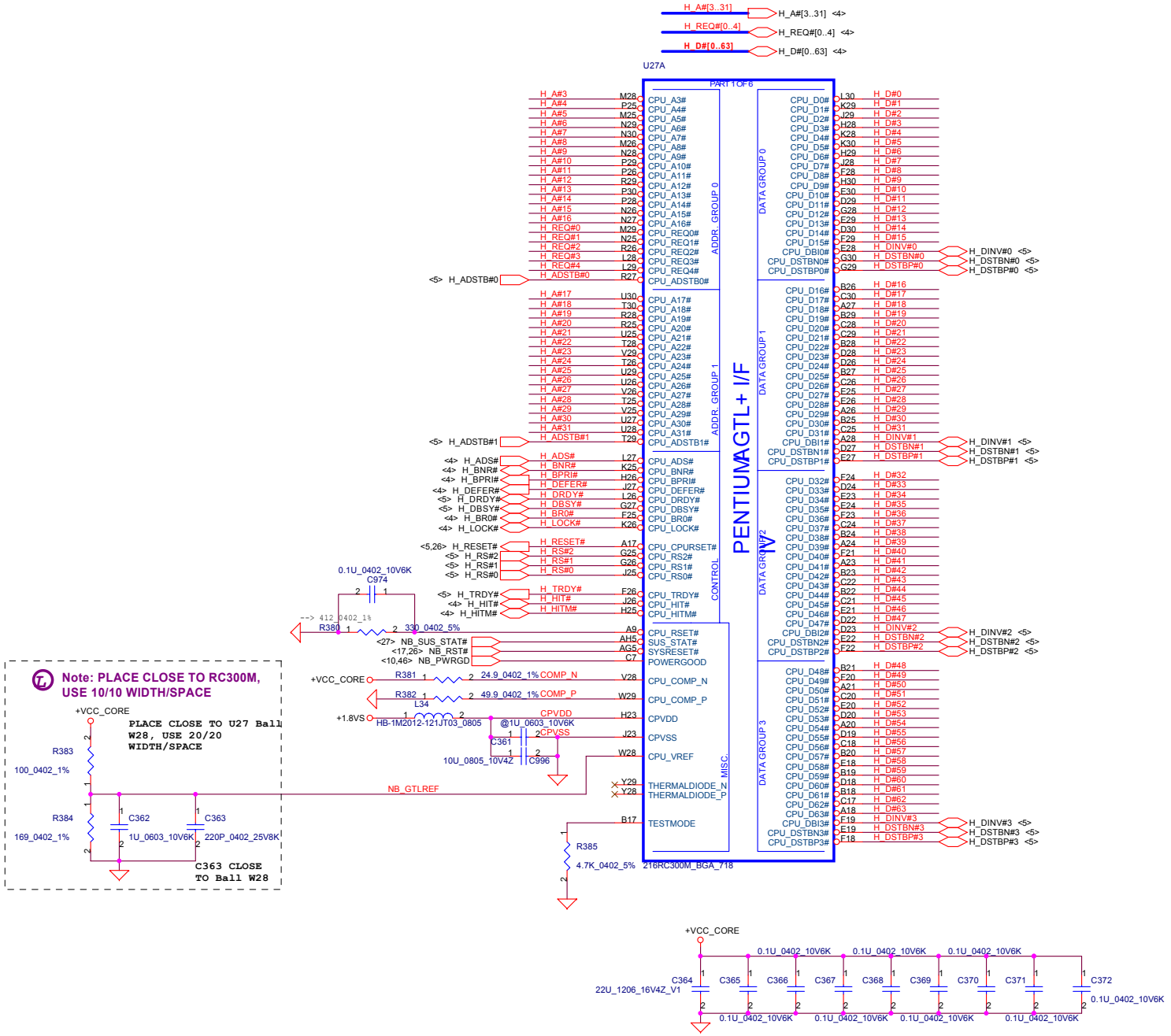

Title	ATI RC300M-AGTL+
Size	Document Number: LA-2411
Rev	0.1
Date:	Tuesday, June 08, 2004
Sheet	8 of 65

THIS SHEET OF ENGINEERING DRAWING IS THE PROPRIETARY PROPERTY OF COMPAL ELECTRONICS, INC. AND CONTAINS CONFIDENTIAL AND TRADE SECRET INFORMATION. THIS SHEET MAY NOT BE TRANSFERED FROM THE CUSTODY OF THE COMPETENT DIVISION OF R&D DEPARTMENT EXCEPT AS AUTHORIZED BY COMPAL ELECTRONICS, INC. NEITHER THIS SHEET NOR THE INFORMATION IT CONTAINS MAY BE USED BY OR DISCLOSED TO ANY THIRD PARTY WITHOUT PRIOR WRITTEN CONSENT OF COMPAL ELECTRONICS, INC.

Compal Electronics, Inc.

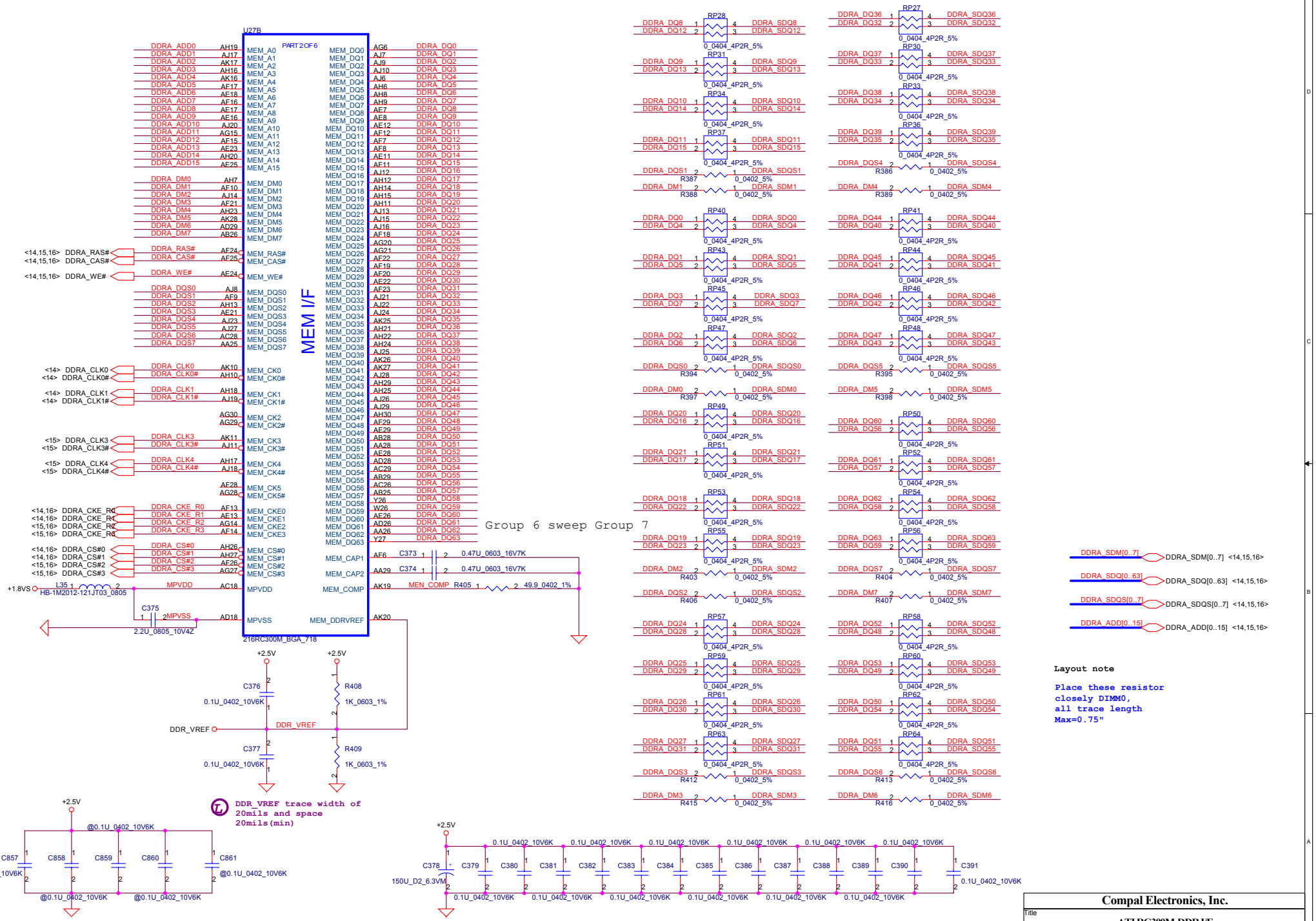

THIS SHEET OF ENGINEERING DRAWING IS THE PROPRIETARY PROPERTY OF COMPAL ELECTRONICS, INC. AND CONTAINS CONFIDENTIAL AND TRADE SECRET INFORMATION. THIS SHEET MAY NOT BE TRANSFERED FROM THE CUSTODY OF THE COMPETENT DIVISION OF R&D DEPARTMENT EXCEPT AS AUTHORIZED BY COMPAL ELECTRONICS, INC. NEITHER THIS SHEET NOR THE INFORMATION IT CONTAINS MAY BE USED BY OR DISCLOSED TO ANY THIRD PARTY WITHOUT PRIOR WRITTEN CONSENT OF COMPAL ELECTRONICS, INC.

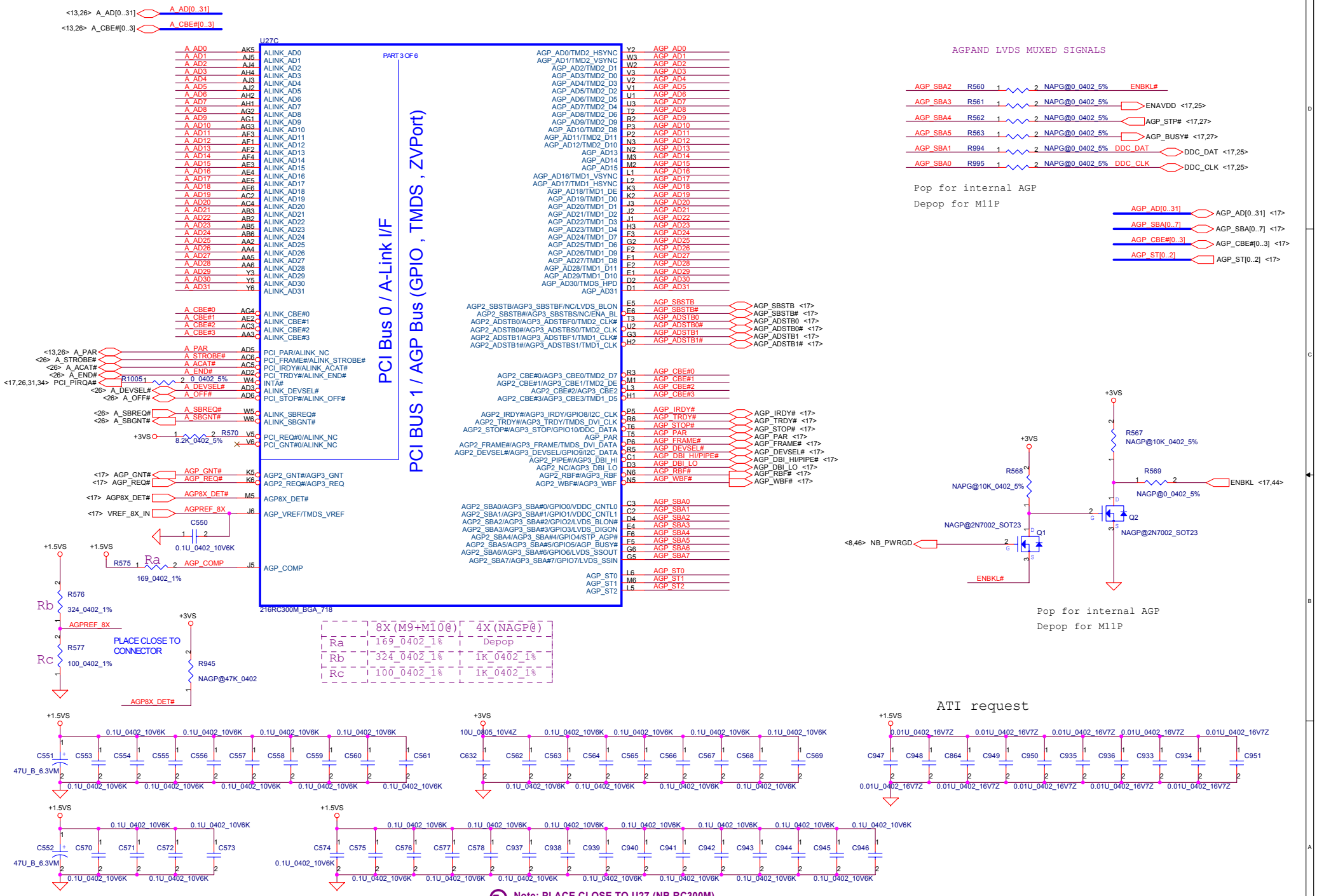

	8X(M9+M10@)	4X(NAGP@)
Ra	169_0402_1%	Depop
Rb	324_0402_1%	1K_0402_1%
Rc	100_0402_1%	1K_0402_1%

THIS SHEET OF ENGINEERING DRAWING IS THE PROPRIETARY PROPERTY OF COMPAL ELECTRONICS, INC. AND CONTAINS CONFIDENTIAL AND TRADE SECRET INFORMATION. THIS SHEET MAY NOT BE TRANSFERED FROM THE CUSTODY OF THE COMPETENT DIVISION OF R&D DEPARTMENT EXCEPT AS AUTHORIZED BY COMPAL ELECTRONICS, INC. NEITHER THIS SHEET NOR THE INFORMATION IT CONTAINS MAY BE USED BY OR DISCLOSED TO ANY THIRD PARTY WITHOUT PRIOR WRITTEN CONSENT OF COMPAL ELECTRONICS, INC.

Compal Electronics, Inc.

Title	ATI RC300M-AGP, ALINK BUS	
Size	Document Number: LA-2411	Rev 0.1
Date: Tuesday, June 08, 2004	Sheet 10 of 65	

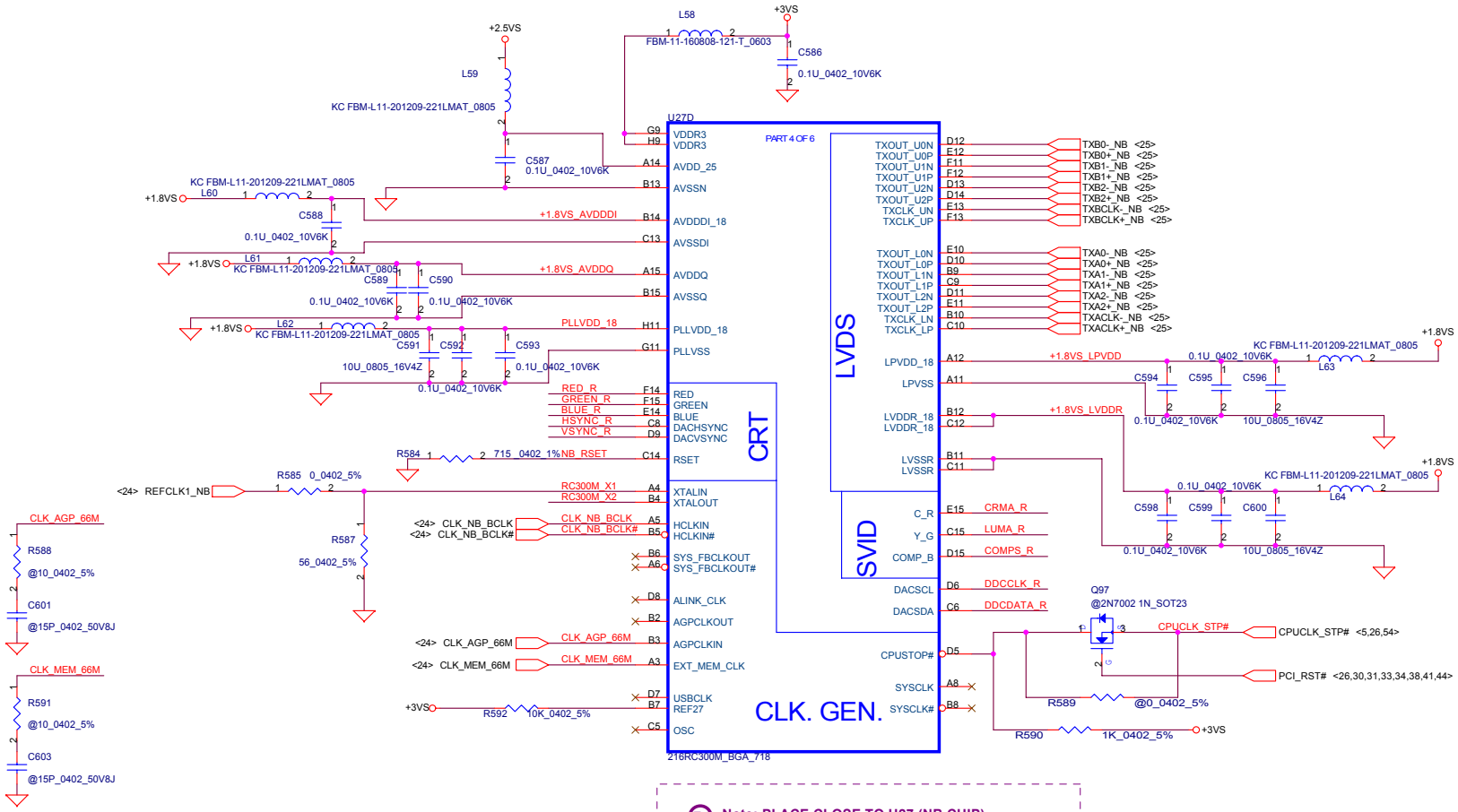

Note: PLACE CLOSE TO U27 (NB CHIP)

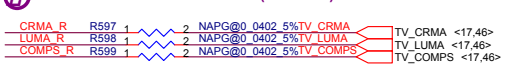

Note: PLACE CLOSE TO U6 (VGA CHIP)

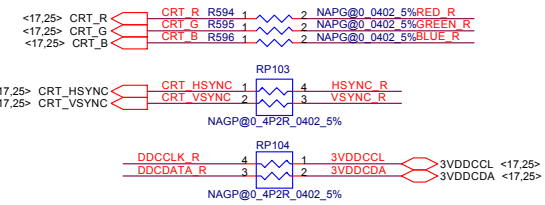

Note: PLACE CLOSE TO U27 (NB CHIP)

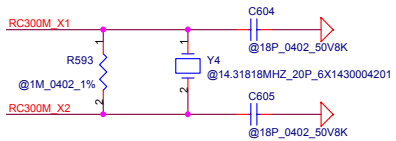

THIS SHEET OF ENGINEERING DRAWING IS THE PROPRIETARY PROPERTY OF COMPAL ELECTRONICS, INC. AND CONTAINS CONFIDENTIAL AND TRADE SECRET INFORMATION. THIS SHEET MAY NOT BE TRANSFERED FROM THE CUSTODY OF THE COMPETENT DIVISION OF R&D DEPARTMENT EXCEPT AS AUTHORIZED BY COMPAL ELECTRONICS, INC. NEITHER THIS SHEET NOR THE INFORMATION IT CONTAINS MAY BE USED BY OR DISCLOSED TO ANY THIRD PARTY WITHOUT PRIOR WRITTEN CONSENT OF COMPAL ELECTRONICS, INC.

Compal Electronics, Inc.	
Title	ATI RC300M-VIDEO I/F
Size	Document Number: LA-2411
Rev	0.1
Date: Tuesday, June 08, 2004	Sheet 11 of 65

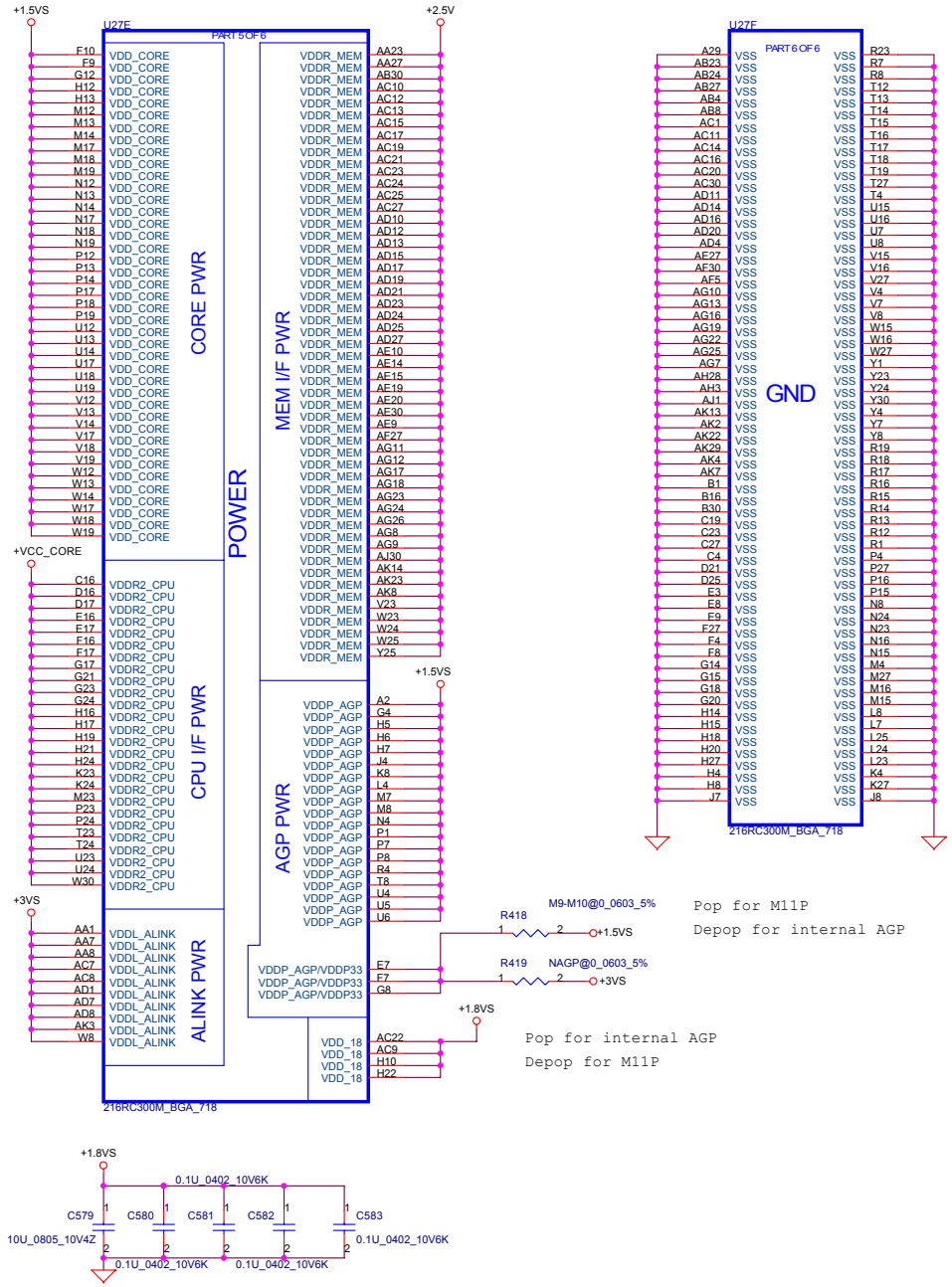

THIS SHEET OF ENGINEERING DRAWING IS THE PROPRIETARY PROPERTY OF COMPAL ELECTRONICS, INC. AND CONTAINS CONFIDENTIAL AND TRADE SECRET INFORMATION. THIS SHEET MAY NOT BE TRANSFERED FROM THE CUSTODY OF THE COMPETENT DIVISION OF R&D DEPARTMENT EXCEPT AS AUTHORIZED BY COMPAL ELECTRONICS, INC. NEITHER THIS SHEET NOR THE INFORMATION IT CONTAINS MAY BE USED BY OR DISCLOSED TO ANY THIRD PARTY WITHOUT PRIOR WRITTEN CONSENT OF COMPAL ELECTRONICS, INC.

Compal Electronics, Inc.			
Title	ATI RC300M-POWER		
Size	Document Number LA-2411		Rev 0.1
Date: Tuesday, June 08, 2004	Sheet 12 of 65		

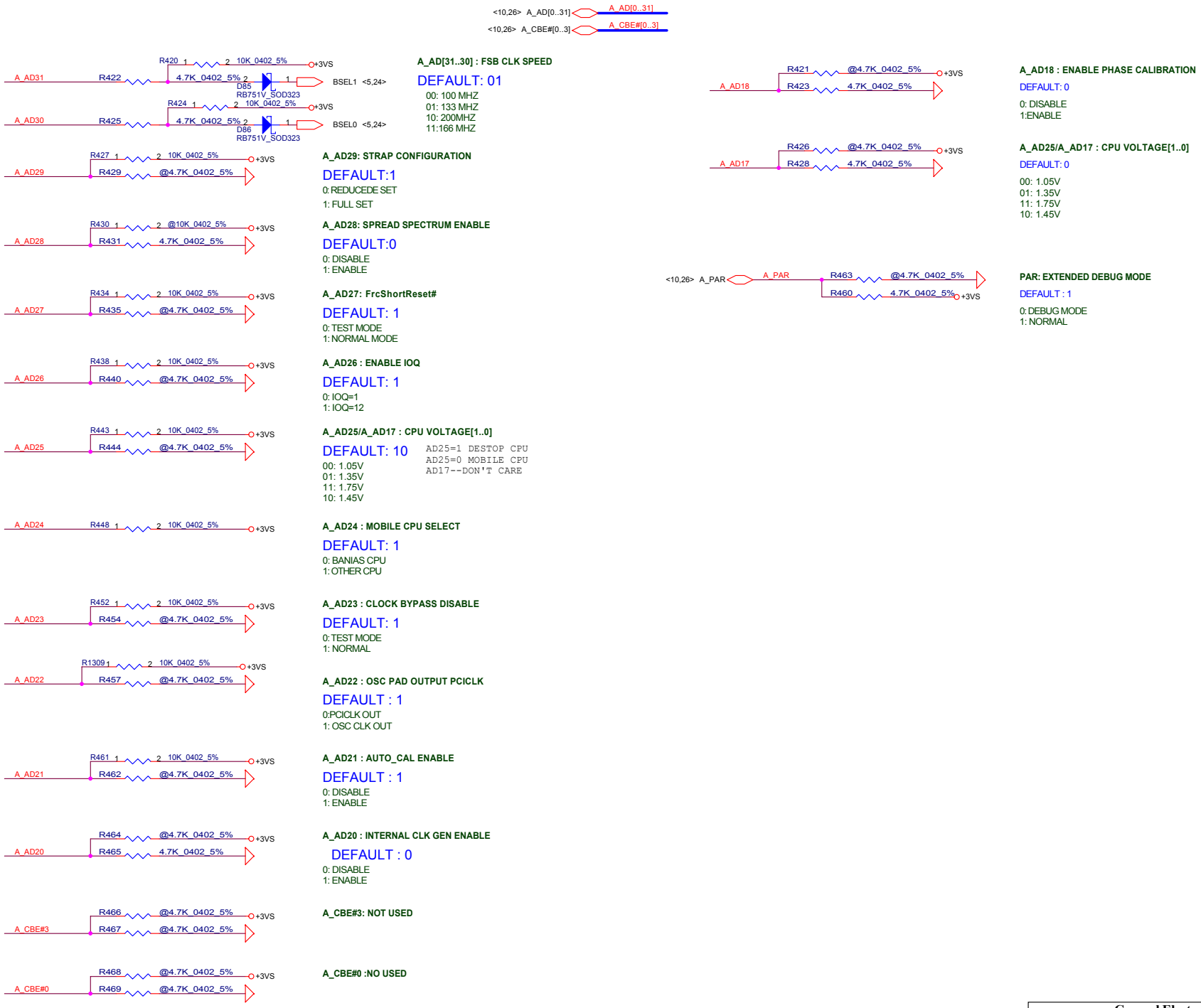

THIS SHEET OF ENGINEERING DRAWING IS THE PROPRIETARY PROPERTY OF COMPAL ELECTRONICS, INC. AND CONTAINS CONFIDENTIAL AND TRADE SECRET INFORMATION. THIS SHEET MAY NOT BE TRANSFERED FROM THE CUSTODY OF THE COMPETENT DIVISION OF R&D DEPARTMENT EXCEPT AS AUTHORIZED BY COMPAL ELECTRONICS, INC. NEITHER THIS SHEET NOR THE INFORMATION IT CONTAINS MAY BE USED BY OR DISCLOSED TO ANY THIRD PARTY WITHOUT PRIOR WRITTEN CONSENT OF COMPAL ELECTRONICS, INC.

Compal Electronics, Inc.	
Title	ATI RC300M-SYSTEM STRAP
Size	Document Number: LA-2411 — Rev 0.1
Date: Tuesday, June 08, 2004	Sheet 13 of 65

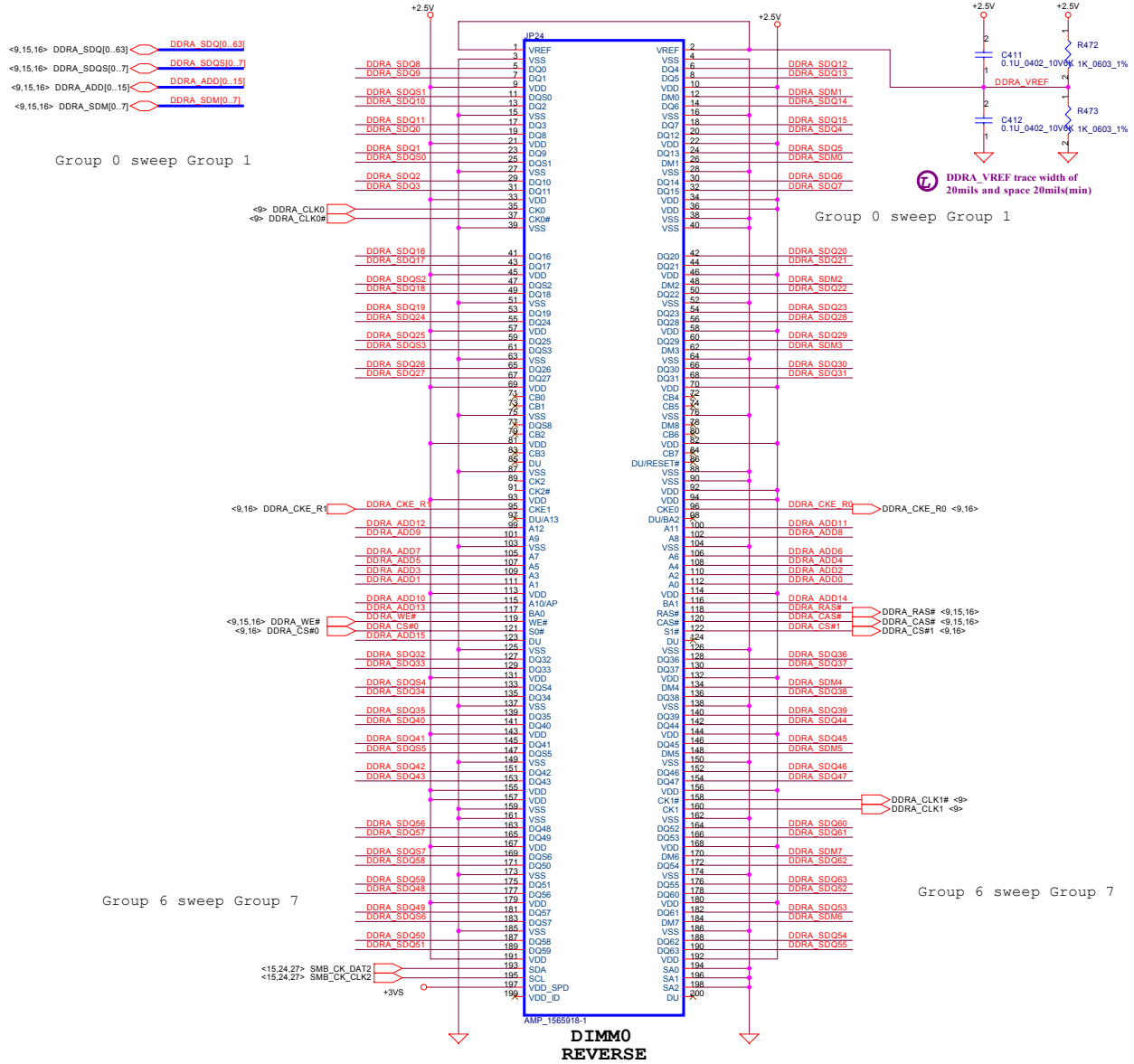

System Memory Decoupling caps

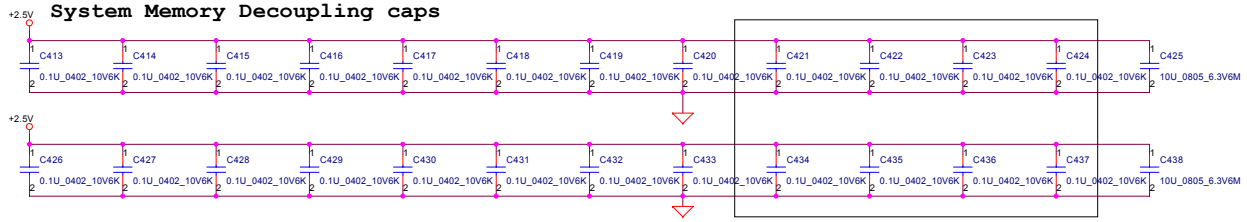

THIS SHEET OF ENGINEERING DRAWING IS THE PROPRIETARY PROPERTY OF COMPAL ELECTRONICS, INC. AND CONTAINS CONFIDENTIAL AND TRADE SECRET INFORMATION. THIS SHEET MAY NOT BE TRANSFERED FROM THE CUSTODY OF THE COMPETENT DIVISION OF R&D DEPARTMENT EXCEPT AS AUTHORIZED BY COMPAL ELECTRONICS, INC. NEITHER THIS SHEET NOR THE INFORMATION IT CONTAINS MAY BE USED BY OR DISCLOSED TO ANY THIRD PARTY WITHOUT PRIOR WRITTEN CONSENT OF COMPAL ELECTRONICS, INC.

Compal Electronics, Inc.	
Title	DDR-SODIMM SLOT1
Size	
Document Number	LA-2411
Rev	0.1
Date: Tuesday, June 08, 2004	Sheet 14 of 65

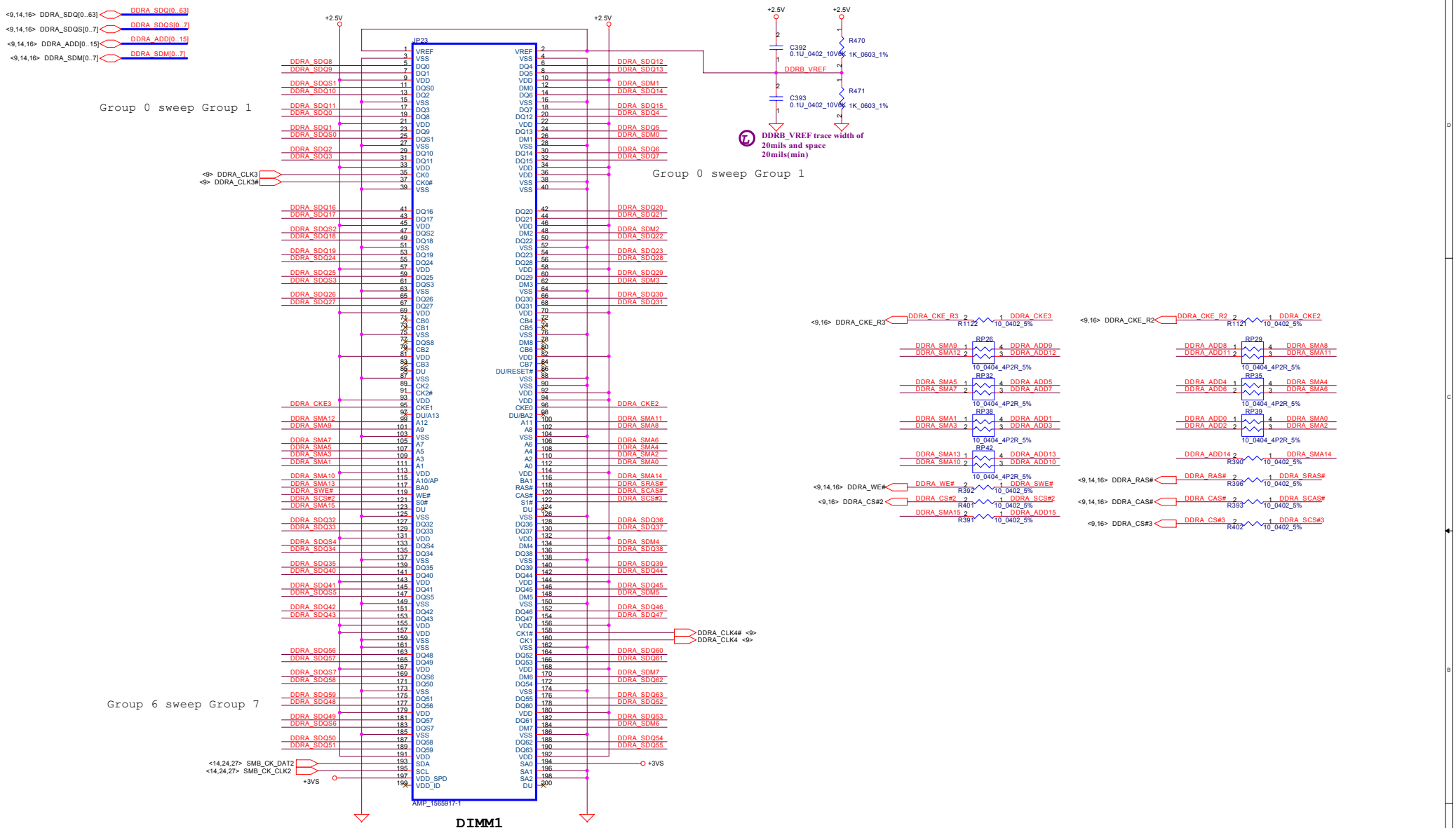

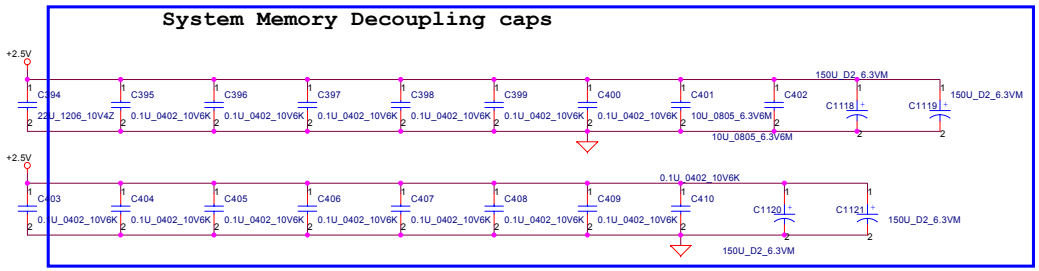

THIS SHEET OF ENGINEERING DRAWING IS THE PROPRIETARY PROPERTY OF COMPAL ELECTRONICS, INC. AND CONTAINS CONFIDENTIAL AND TRADE SECRET INFORMATION. THIS SHEET MAY NOT BE TRANSFERED FROM THE CUSTODY OF THE COMPETENT DIVISION OF R&D DEPARTMENT EXCEPT AS AUTHORIZED BY COMPAL ELECTRONICS, INC. NEITHER THIS SHEET NOR THE INFORMATION IT CONTAINS MAY BE USED BY OR DISCLOSED TO ANY THIRD PARTY WITHOUT PRIOR WRITTEN CONSENT OF COMPAL ELECTRONICS, INC.

Compal Electronics, Inc.	
Title	DDR-SODIMM SLOT2
Size	
Document Number	LA-2411
Rev	0.1
Date: Tuesday, June 08, 2004	Sheet 15 of 65

DDR Termination resistors & Decoupling caps

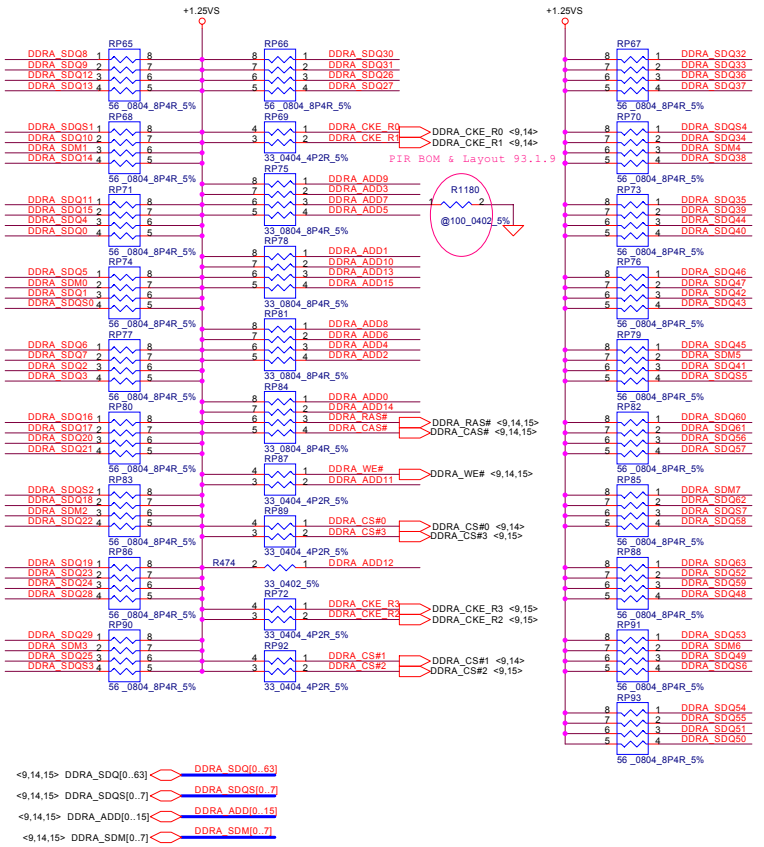

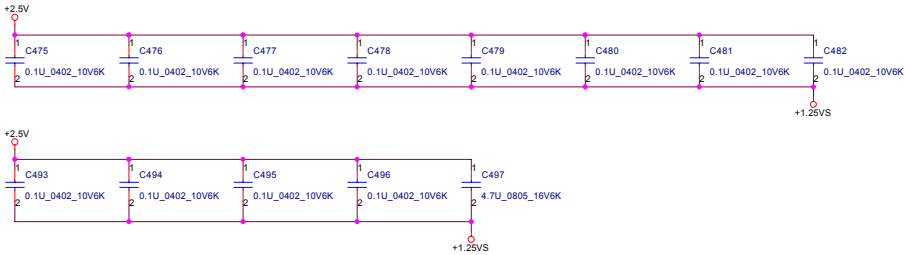

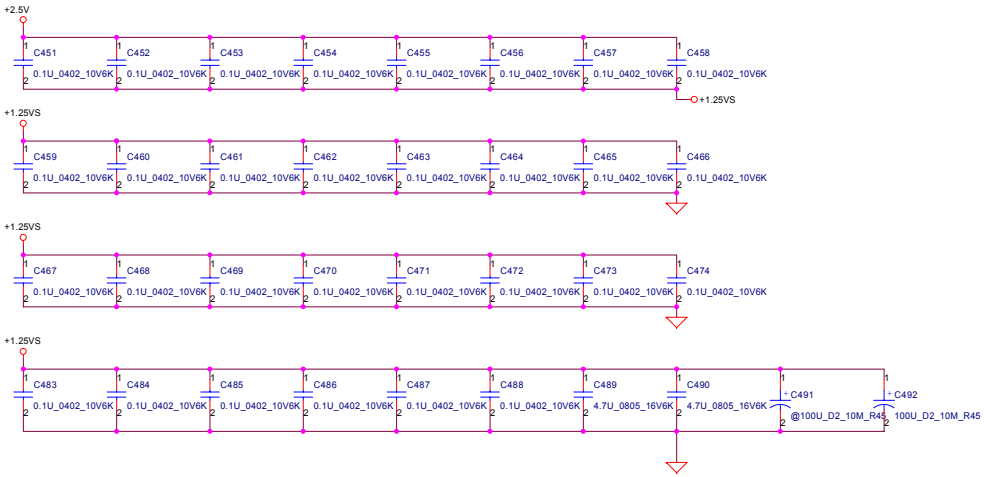

THIS SHEET OF ENGINEERING DRAWING IS THE PROPRIETARY PROPERTY OF COMPAL ELECTRONICS, INC. AND CONTAINS CONFIDENTIAL AND TRADE SECRET INFORMATION. THIS SHEET MAY NOT BE TRANSFERED FROM THE CUSTODY OF THE COMPETENT DIVISION OF R&D DEPARTMENT EXCEPT AS AUTHORIZED BY COMPAL ELECTRONICS, INC. NEITHER THIS SHEET NOR THE INFORMATION IT CONTAINS MAY BE USED BY OR DISCLOSED TO ANY THIRD PARTY WITHOUT PRIOR WRITTEN CONSENT OF COMPAL ELECTRONICS, INC.

Compal Electronics, Inc.			
Title: DDR Termination Resistors			
Size	Document Number: LA-2411		Rev 0.1
Date: Tuesday, June 08, 2004	Sheet 16 of 65		

AGP, DAC & LVDS INTERFACE

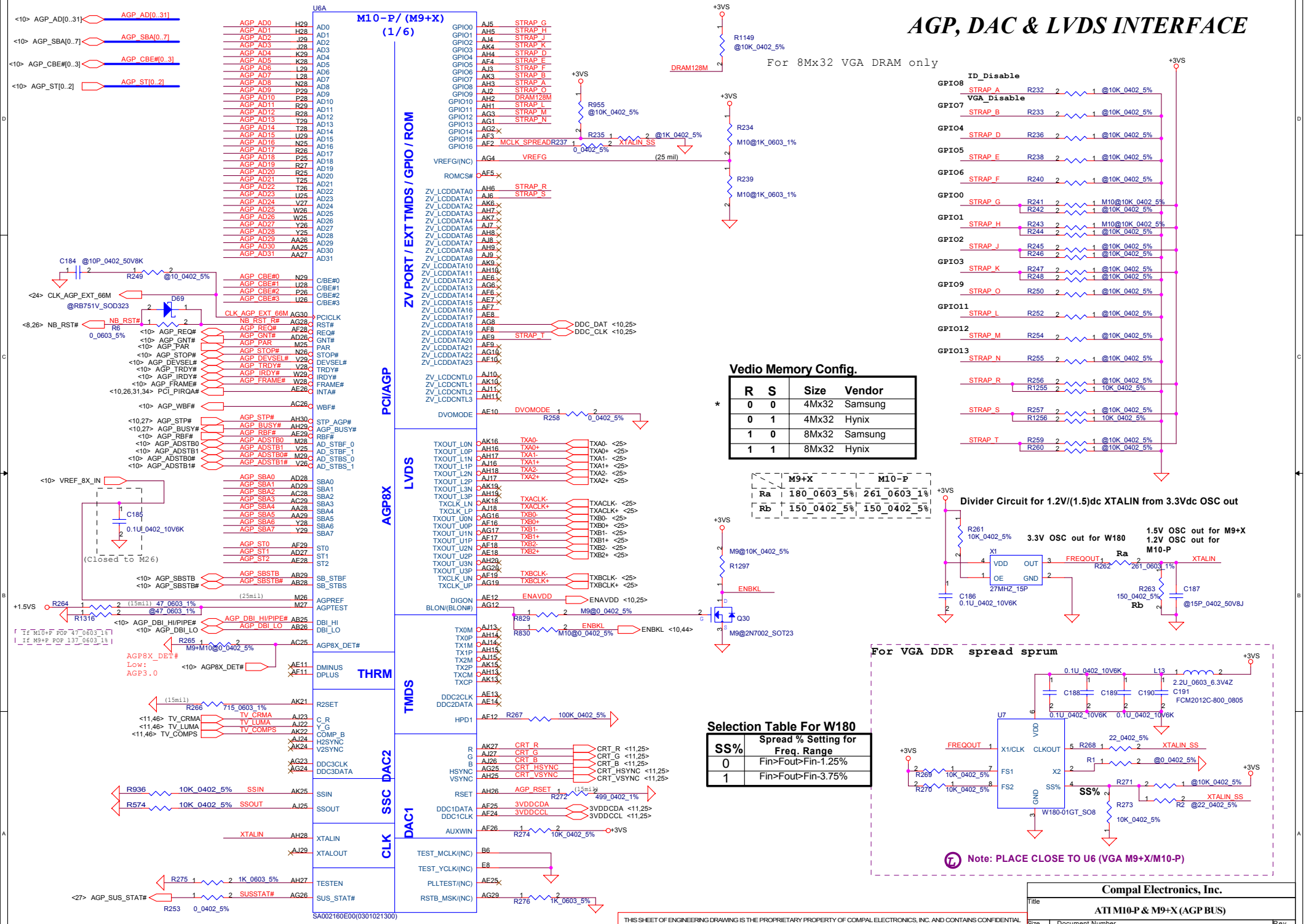

R	S	Size	Vendor
0	0	4Mx32	Samsung
0	1	4Mx32	Hynix
1	0	8Mx32	Samsung
1	1	8Mx32	Hynix

	M9+X	M10-P
Ra	180_0603_5%	261_0603_1%
Rb	150_0402_5%	150_0402_5%

SS%	Spread % Setting for Freq. Range
0	Fin>Fout>Fin-1.25%
1	Fin>Fout>Fin-3.75%

THIS SHEET OF ENGINEERING DRAWING IS THE PROPRIETARY PROPERTY OF COMPAL ELECTRONICS, INC. AND CONTAINS CONFIDENTIAL AND TRADE SECRET INFORMATION. THIS SHEET MAY NOT BE TRANSFERED FROM THE CUSTODY OF THE COMPETENT DIVISION OF R&D DEPARTMENT EXCEPT AS AUTHORIZED BY COMPAL ELECTRONICS, INC. NEITHER THIS SHEET NOR THE INFORMATION IT CONTAINS MAY BE USED BY OR DISCLOSED TO ANY THIRD PARTY WITHOUT PRIOR WRITTEN CONSENT OF COMPAL ELECTRONICS, INC.

Compal Electronics, Inc.

Title: ATI M10-P & M9+X (AGP BUS)

Size: | Document Number: LA-2411 | Rev: 0.1

Date: Tuesday, June 08, 2004 | Sheet 17 of 65

MEMORY INTERFACE A

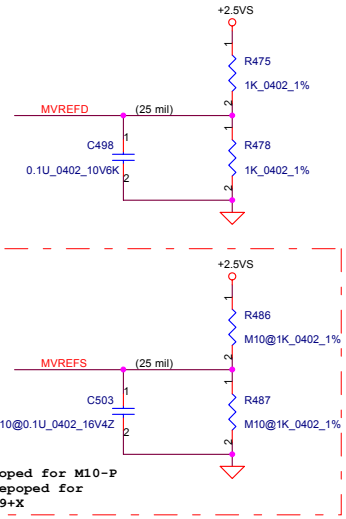

THIS SHEET OF ENGINEERING DRAWING IS THE PROPRIETARY PROPERTY OF COMPAL ELECTRONICS, INC. AND CONTAINS CONFIDENTIAL AND TRADE SECRET INFORMATION. THIS SHEET MAY NOT BE TRANSFERED FROM THE CUSTODY OF THE COMPETENT DIVISION OF R&D DEPARTMENT EXCEPT AS AUTHORIZED BY COMPAL ELECTRONICS, INC. NEITHER THIS SHEET NOR THE INFORMATION IT CONTAINS MAY BE USED BY OR DISCLOSED TO ANY THIRD PARTY WITHOUT PRIOR WRITTEN CONSENT OF COMPAL ELECTRONICS, INC.

Compal Electronics, Inc.	
Title	ATI M10-P/M9+X DDR-A
Size	Document Number: LA-2411 — Rev 0.1
Date: Tuesday, June 08, 2004	Sheet 18 of 65

MEMORY INTERFACE B

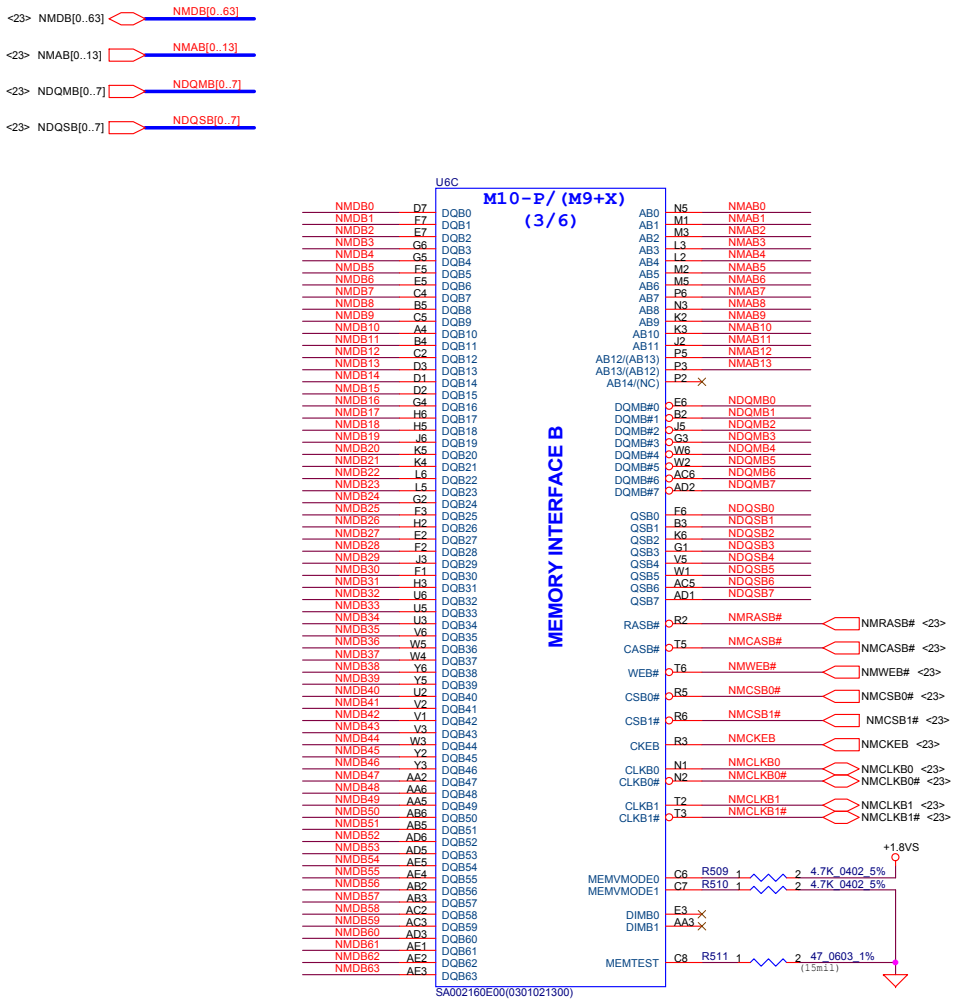

THIS SHEET OF ENGINEERING DRAWING IS THE PROPRIETARY PROPERTY OF COMPAL ELECTRONICS, INC. AND CONTAINS CONFIDENTIAL AND TRADE SECRET INFORMATION. THIS SHEET MAY NOT BE TRANSFERED FROM THE CUSTODY OF THE COMPETENT DIVISION OF R&D DEPARTMENT EXCEPT AS AUTHORIZED BY COMPAL ELECTRONICS, INC. NEITHER THIS SHEET NOR THE INFORMATION IT CONTAINS MAY BE USED BY OR DISCLOSED TO ANY THIRD PARTY WITHOUT PRIOR WRITTEN CONSENT OF COMPAL ELECTRONICS, INC.

Compal Electronics, Inc.	
Title	ATI M10-P/M9+X DDR-B
Size	Document Number: LA-2411 — Rev 0.1
Date: Tuesday, June 08, 2004	Sheet 19 of 65

POWER INTERFACE

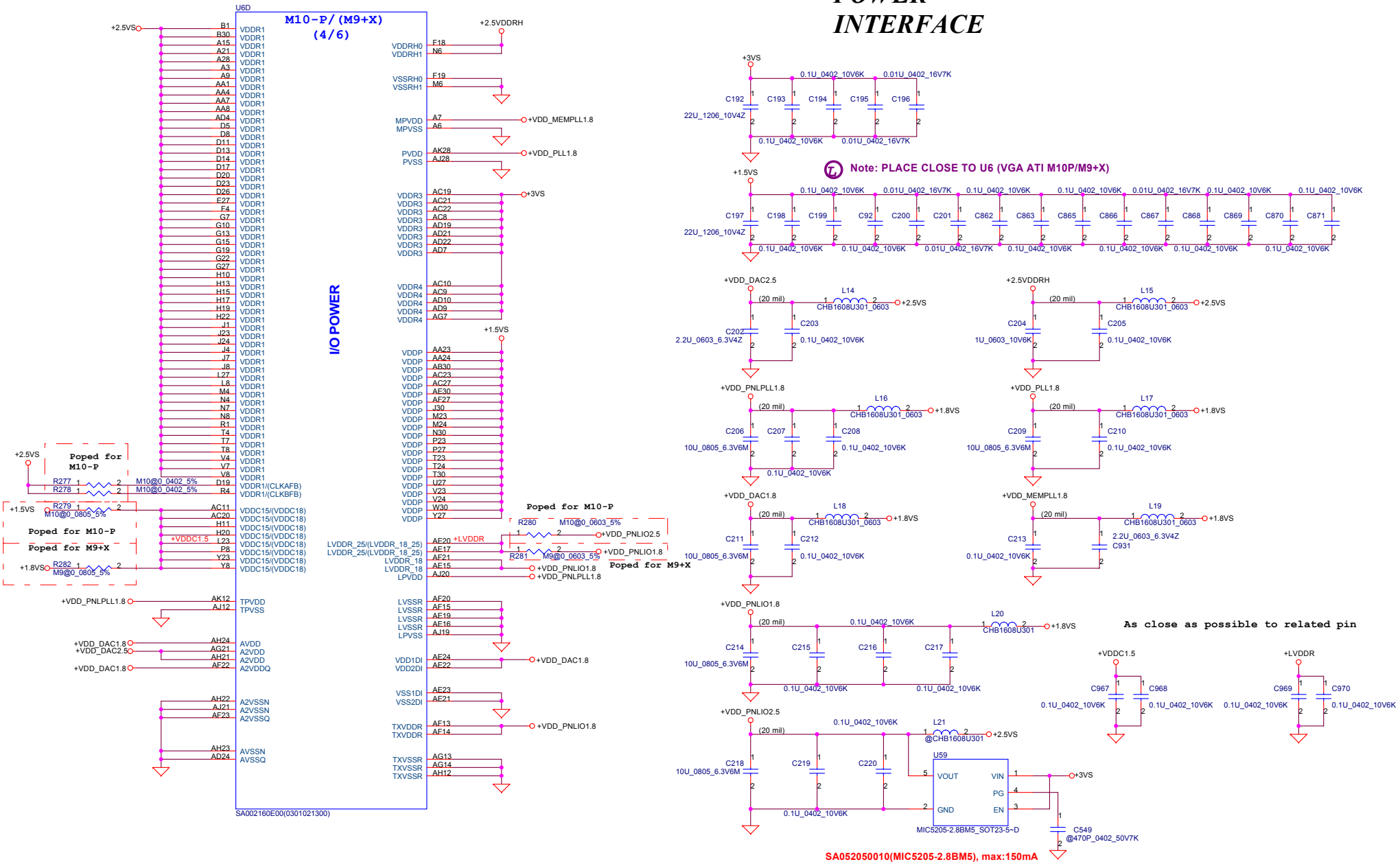

THIS SHEET OF ENGINEERING DRAWING IS THE PROPRIETARY PROPERTY OF COMPAL ELECTRONICS, INC. AND CONTAINS CONFIDENTIAL AND TRADE SECRET INFORMATION. THIS SHEET MAY NOT BE TRANSFERED FROM THE CUSTODY OF THE COMPETENT DIVISION OF R&D DEPARTMENT EXCEPT AS AUTHORIZED BY COMPAL ELECTRONICS, INC. NEITHER THIS SHEET NOR THE INFORMATION IT CONTAINS MAY BE USED BY OR DISCLOSED TO ANY THIRD PARTY WITHOUT PRIOR WRITTEN CONSENT OF COMPAL ELECTRONICS, INC.

Compal Electronics, Inc.	
Title	ATI M10-P/M9+X POWER-A
Size	Document Number: LA-2411
Rev	0.1
Date: Tuesday, June 08, 2004	Sheet 20 of 65

POWER INTERFACE

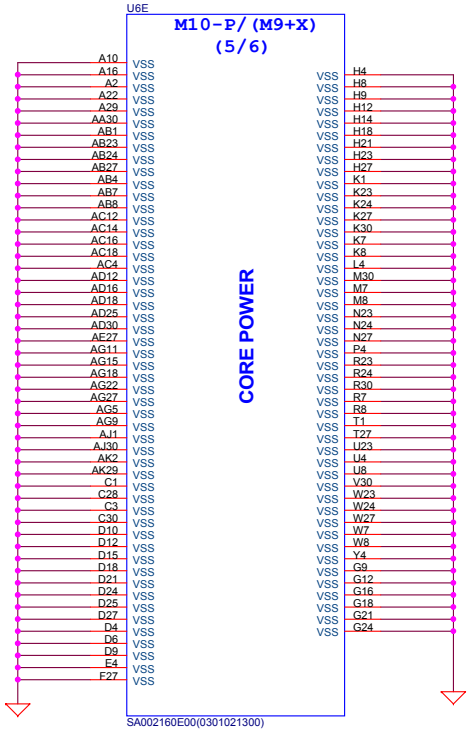

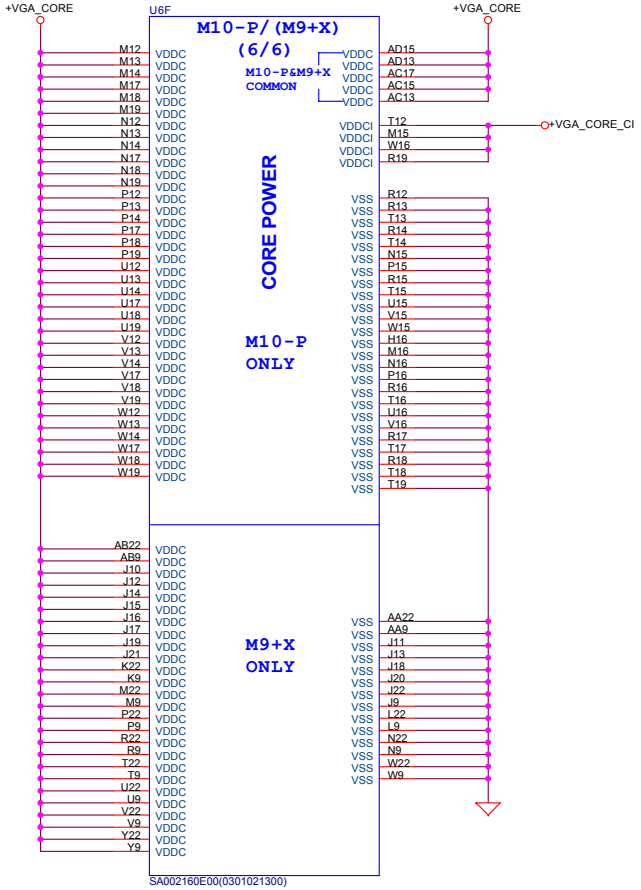

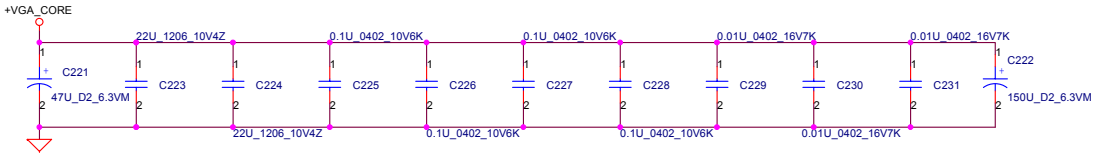

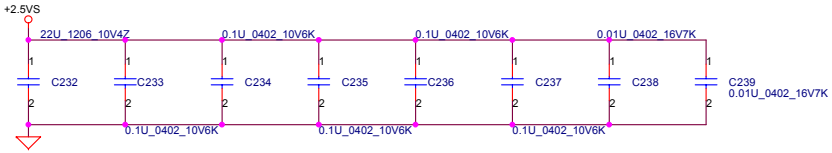

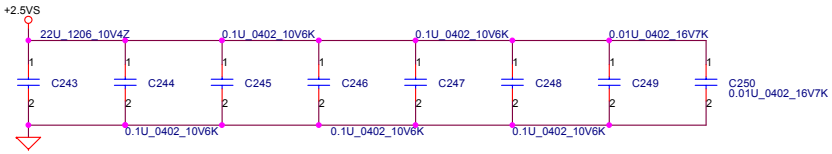

As close as ppossible to related pin

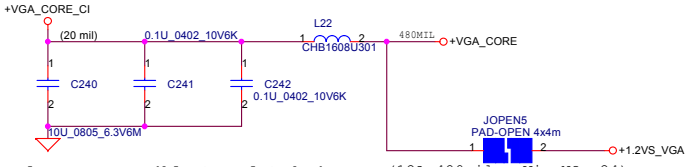

As close as ppossible to related pin

(12A,480mils ,Via NO.=24)

THIS SHEET OF ENGINEERING DRAWING IS THE PROPRIETARY PROPERTY OF COMPAL ELECTRONICS, INC. AND CONTAINS CONFIDENTIAL AND TRADE SECRET INFORMATION. THIS SHEET MAY NOT BE TRANSFERED FROM THE CUSTODY OF THE COMPETENT DIVISION OF R&D DEPARTMENT EXCEPT AS AUTHORIZED BY COMPAL ELECTRONICS, INC. NEITHER THIS SHEET NOR THE INFORMATION IT CONTAINS MAY BE USED BY OR DISCLOSED TO ANY THIRD PARTY WITHOUT PRIOR WRITTEN CONSENT OF COMPAL ELECTRONICS, INC.

Compal Electronics, Inc.	
Title	ATI M10-P/M9+X POWER-B
Size	Document Number: LA-2411 — Rev 0.1
Date: Tuesday, June 08, 2004	Sheet 21 of 65

VGA DDR FOR CHANNEL A

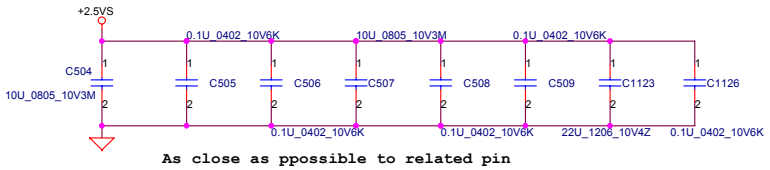

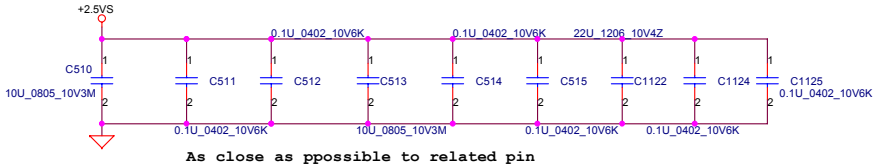

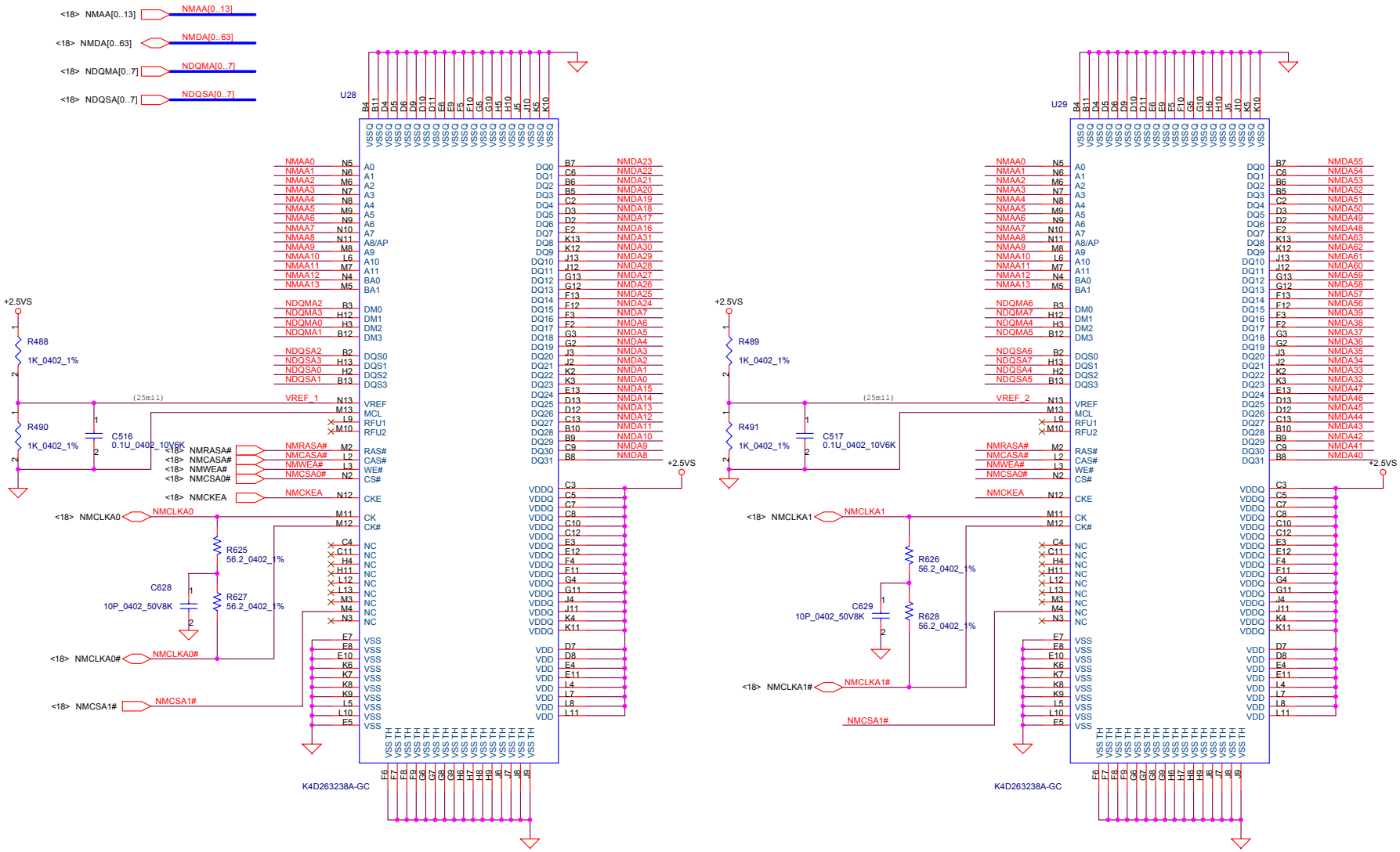

THIS SHEET OF ENGINEERING DRAWING IS THE PROPRIETARY PROPERTY OF COMPAL ELECTRONICS, INC. AND CONTAINS CONFIDENTIAL AND TRADE SECRET INFORMATION. THIS SHEET MAY NOT BE TRANSFERED FROM THE CUSTODY OF THE COMPETENT DIVISION OF R&D DEPARTMENT EXCEPT AS AUTHORIZED BY COMPAL ELECTRONICS, INC. NEITHER THIS SHEET NOR THE INFORMATION IT CONTAINS MAY BE USED BY OR DISCLOSED TO ANY THIRD PARTY WITHOUT PRIOR WRITTEN CONSENT OF COMPAL ELECTRONICS, INC.

Compal Electronics, Inc.			
Title	VGA DDR FOR CHANNEL A		
Size	Document Number LA-2411		Rev 0.1
Date: Tuesday, June 08, 2004	Sheet 22 of 65		

VGA DDR FOR CHANNEL B

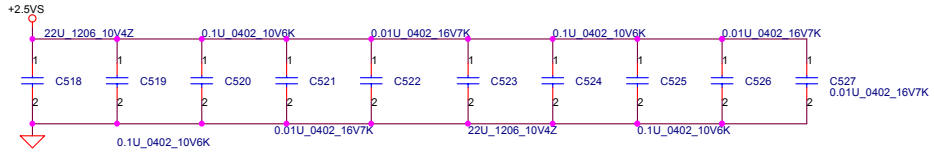

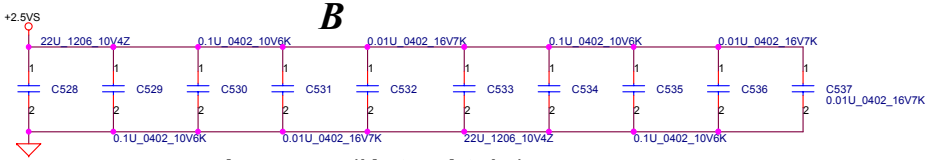

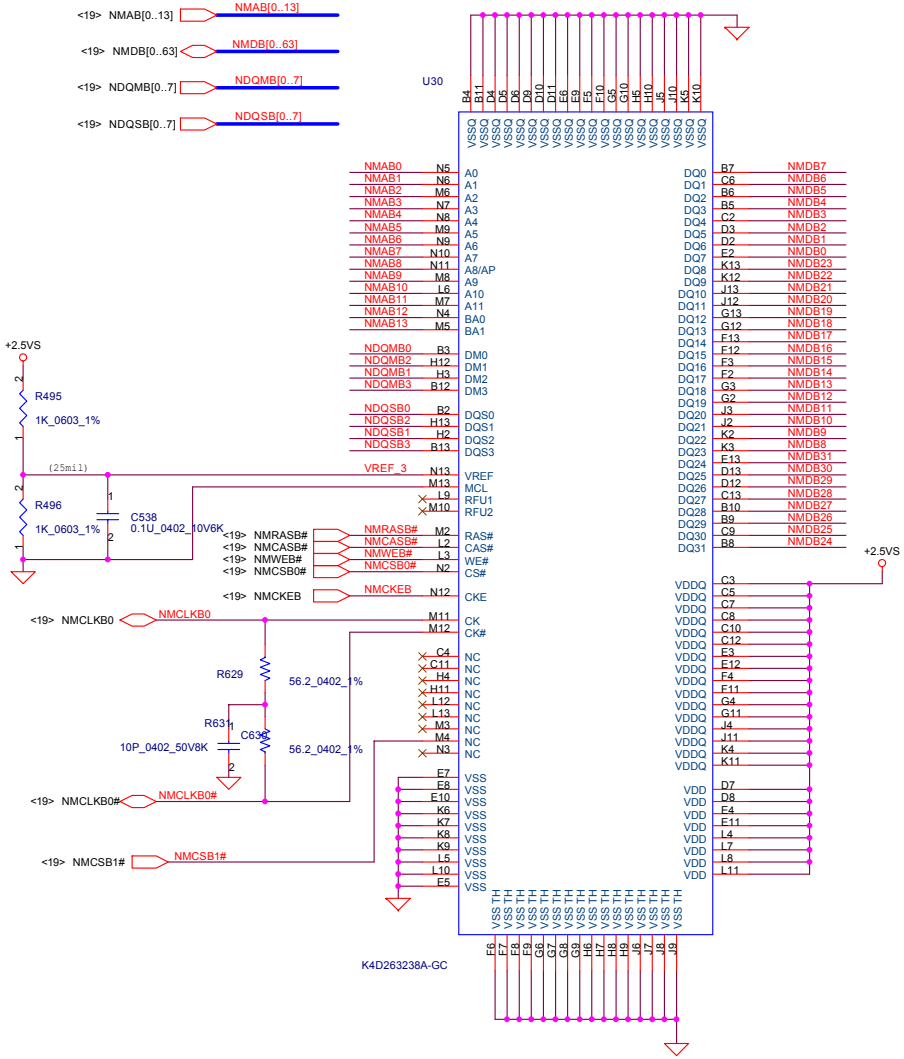

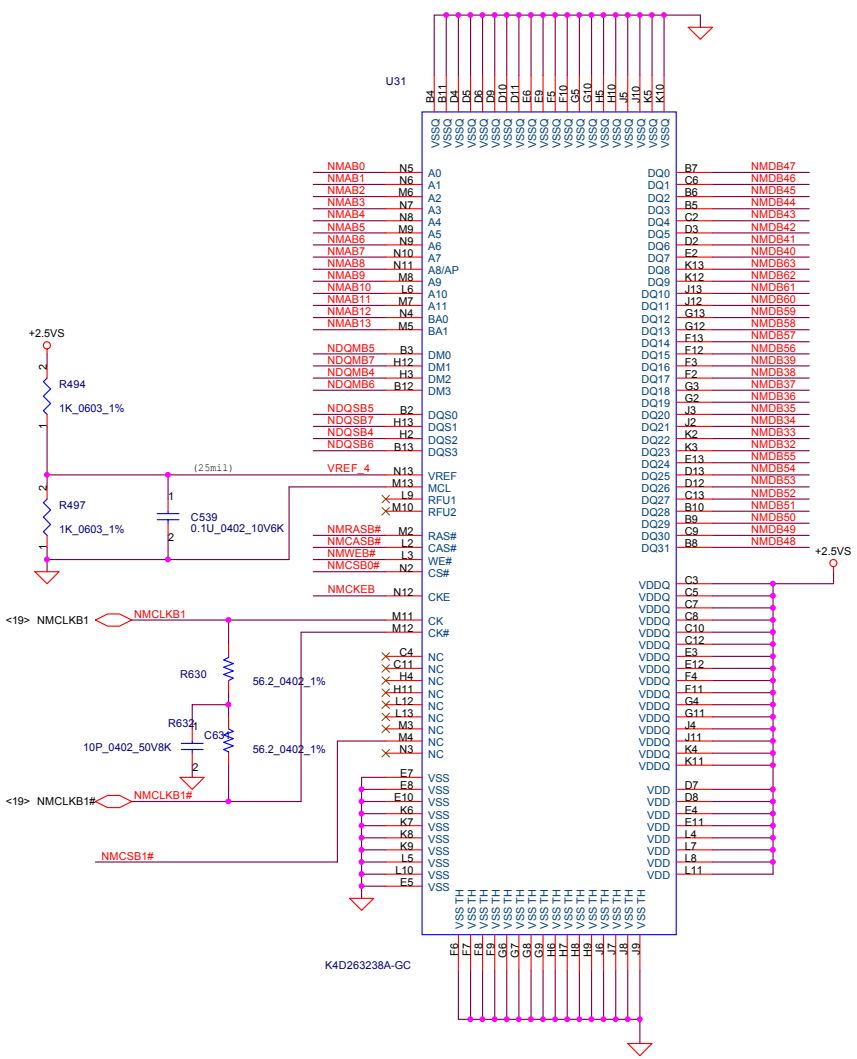

THIS SHEET OF ENGINEERING DRAWING IS THE PROPRIETARY PROPERTY OF COMPAL ELECTRONICS, INC. AND CONTAINS CONFIDENTIAL AND TRADE SECRET INFORMATION. THIS SHEET MAY NOT BE TRANSFERED FROM THE CUSTODY OF THE COMPETENT DIVISION OF R&D DEPARTMENT EXCEPT AS AUTHORIZED BY COMPAL ELECTRONICS, INC. NEITHER THIS SHEET NOR THE INFORMATION IT CONTAINS MAY BE USED BY OR DISCLOSED TO ANY THIRD PARTY WITHOUT PRIOR WRITTEN CONSENT OF COMPAL ELECTRONICS, INC.

Compal Electronics, Inc.	
Title	VGA DDR FOR CHANNEL B
Size	Document Number: LA-2411 — Rev 0.1
Date: Tuesday, June 08, 2004	Sheet 23 of 65

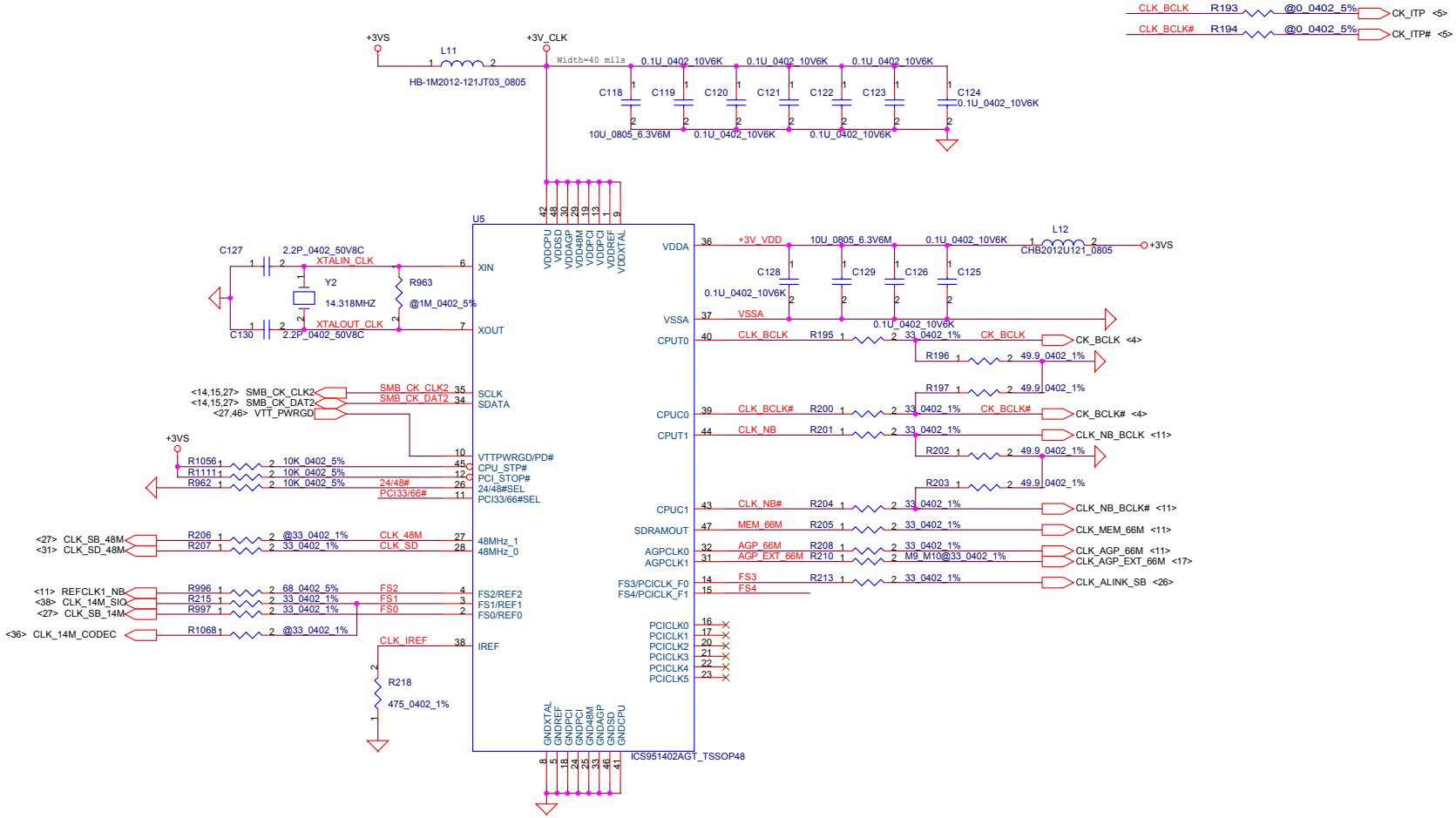

CLOCK FREQUENCY SELECT TABLE

FS4	FS3	FS2	FS1	FS0	CPU	MEM	With Spread Enabled…
0	0	0	1	0	200	200	Spreaf OFF OR Center spread +/-0.3%
0	0	0	0	1	133	133	
0	0	0	0	0	100	100	

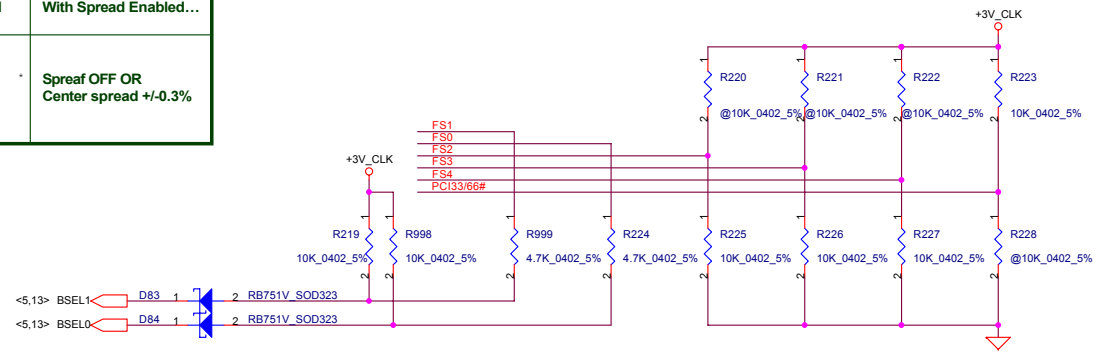

Note: 0 = PULL LOW
1 = PULL HIGH

A-LINK FREQ

PCI33/66# = HIGH	66MHZ
PCI33/66# = LOW	33MHZ

THIS SHEET OF ENGINEERING DRAWING IS THE PROPRIETARY PROPERTY OF COMPAL ELECTRONICS, INC. AND CONTAINS CONFIDENTIAL AND TRADE SECRET INFORMATION. THIS SHEET MAY NOT BE TRANSFERED FROM THE CUSTODY OF THE COMPETENT DIVISION OF R&D DEPARTMENT EXCEPT AS AUTHORIZED BY COMPAL ELECTRONICS, INC. NEITHER THIS SHEET NOR THE INFORMATION IT CONTAINS MAY BE USED BY OR DISCLOSED TO ANY THIRD PARTY WITHOUT PRIOR WRITTEN CONSENT OF COMPAL ELECTRONICS, INC.

Compal Electronics, Inc.

Title: **Clock Generator**

Size | Document Number: **LA-2411** | Rev 0.1

Date: Tuesday, June 08, 2004 | Sheet 24 of 65

LCD CONN

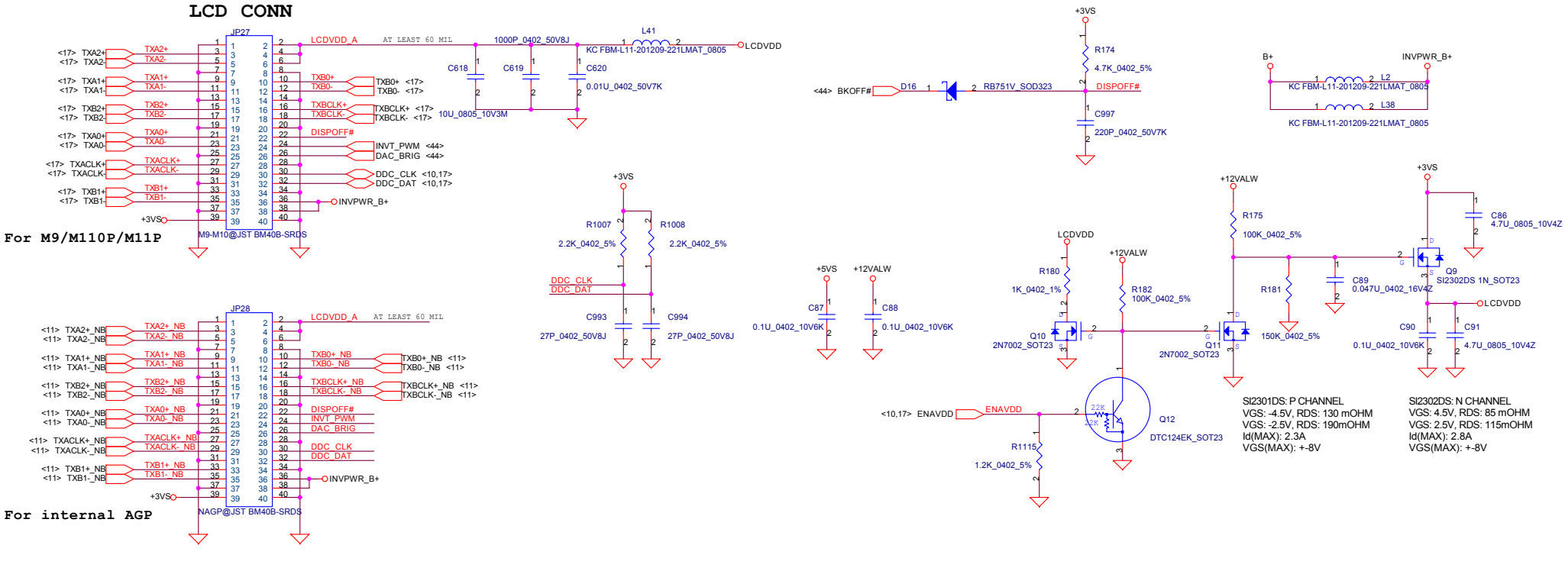

CRT CONNECTOR

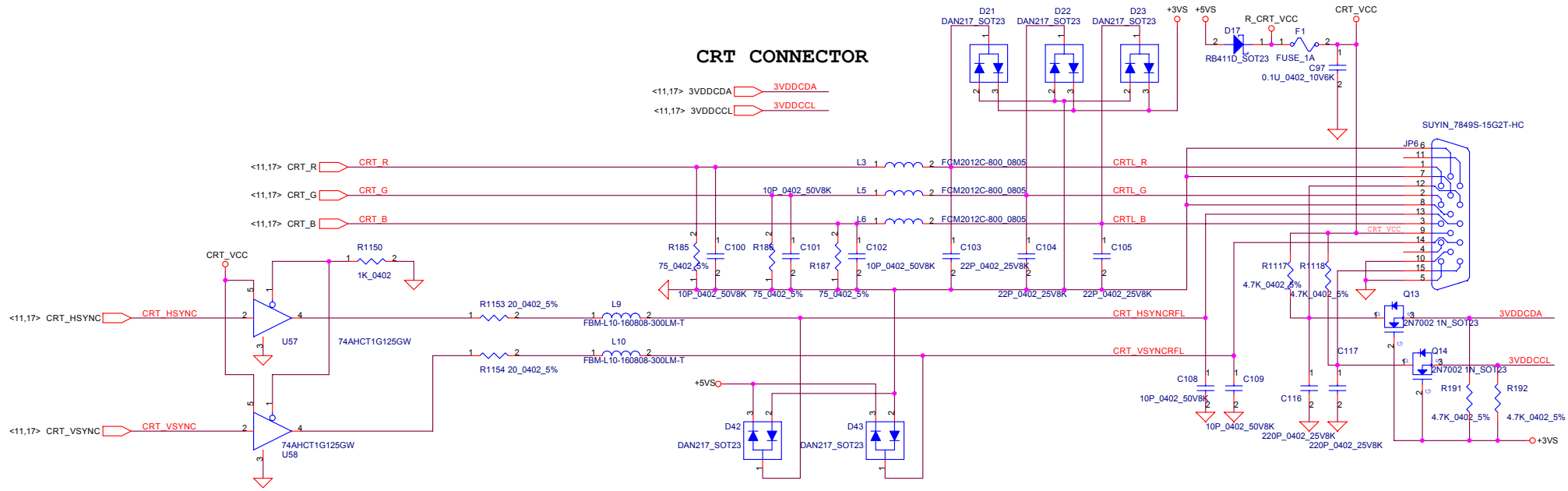

THIS SHEET OF ENGINEERING DRAWING IS THE PROPRIETARY PROPERTY OF COMPAL ELECTRONICS, INC. AND CONTAINS CONFIDENTIAL AND TRADE SECRET INFORMATION. THIS SHEET MAY NOT BE TRANSFERED FROM THE CUSTODY OF THE COMPETENT DIVISION OF R&D DEPARTMENT EXCEPT AS AUTHORIZED BY COMPAL ELECTRONICS, INC. NEITHER THIS SHEET NOR THE INFORMATION IT CONTAINS MAY BE USED BY OR DISCLOSED TO ANY THIRD PARTY WITHOUT PRIOR WRITTEN CONSENT OF COMPAL ELECTRONICS, INC.

Compal Electronics, Inc.	
Title	LCD,CRT,TV-OUT & Inverter BD CONN.
Size	Document Number: LA-2411
Rev	0.1
Custom	
Date: Tuesday, June 08, 2004	Sheet 25 of 65

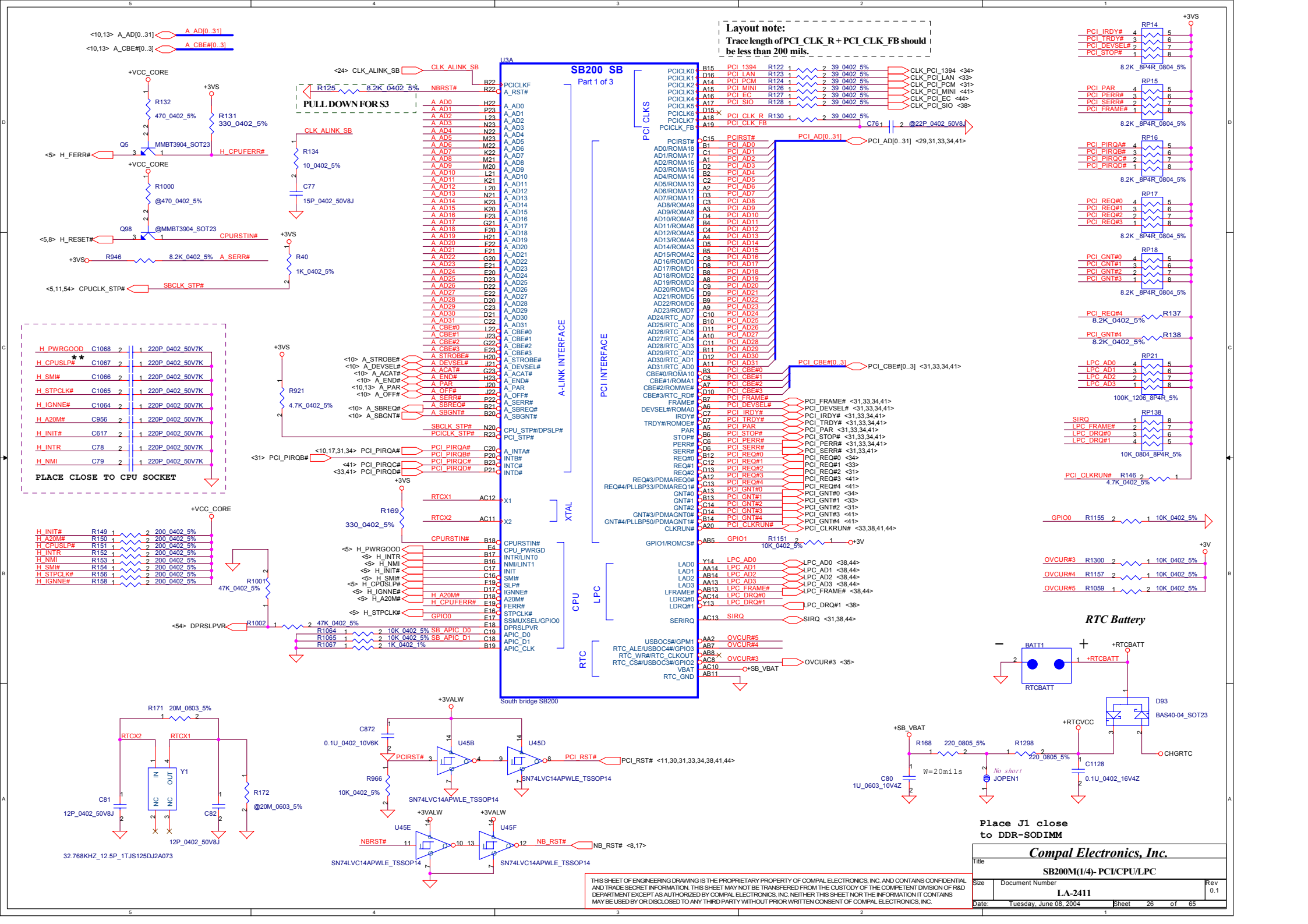
Layout note:
Trace length of PCI_CLK_R + PCI_CLK_FB should be less than 200 mils.
SB200 SB
Part 1 of 3
U3A
South bridge SB200
A-LINK INTERFACE
PCI CLKS
PCI INTERFACE
XTAL
CPU
LPC
RTC
PULL DOWN FOR S3
PLACE CLOSE TO CPU SOCKET
RTC Battery
Place J1 close to DDR-SODIMM
Compal Electronics, Inc.
SB200M(1/4)- PCI/CPU/LPC
LA-2411
Tuesday, June 08, 2004
Sheet 26 of 65

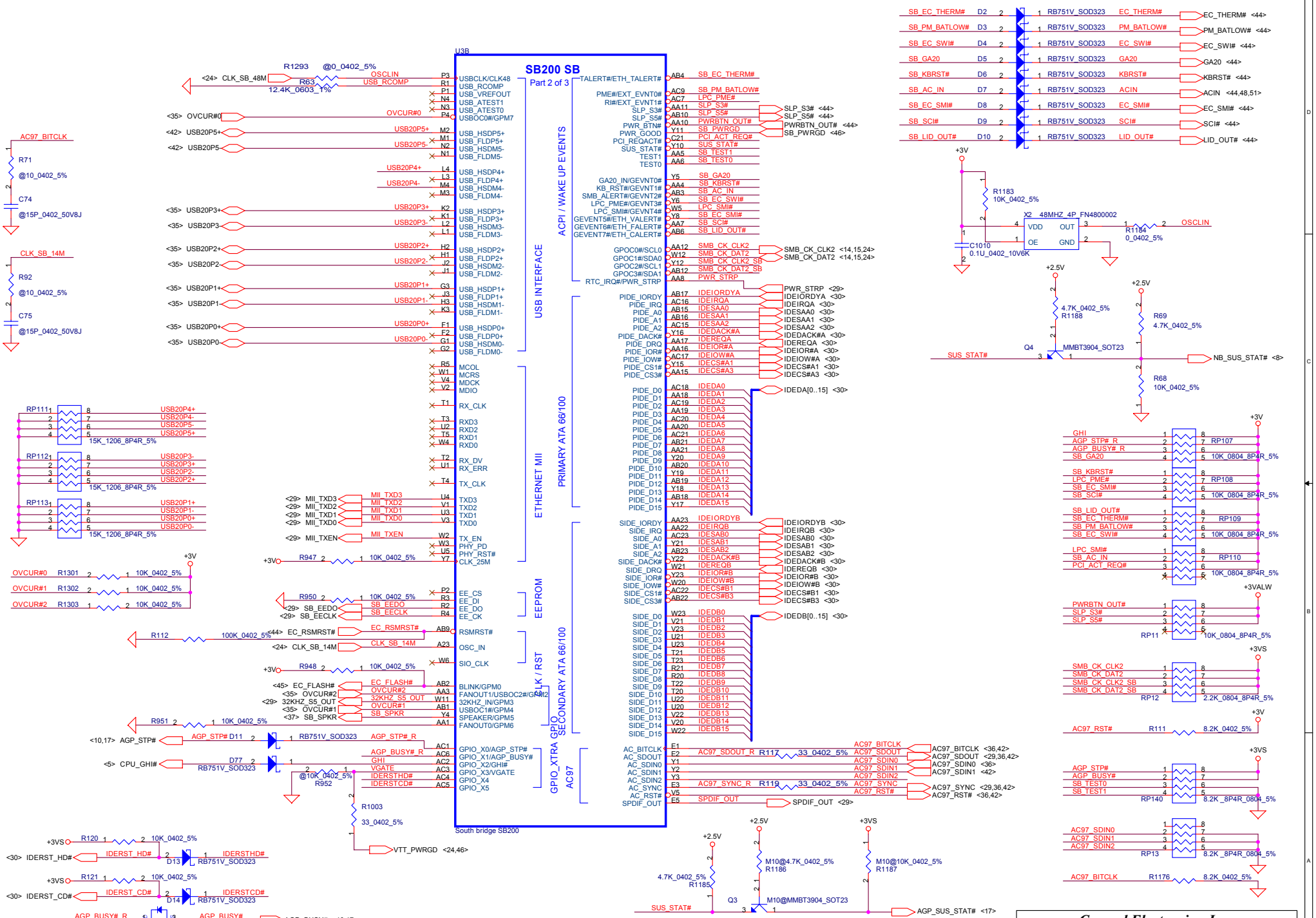

THIS SHEET OF ENGINEERING DRAWING IS THE PROPRIETARY PROPERTY OF COMPAL ELECTRONICS, INC. AND CONTAINS CONFIDENTIAL AND TRADE SECRET INFORMATION. THIS SHEET MAY NOT BE TRANSFERRED FROM THE CUSTODY OF THE COMPETENT DIVISION OF R&D DEPARTMENT EXCEPT AS AUTHORIZED BY COMPAL ELECTRONICS, INC. NEITHER THIS SHEET NOR THE INFORMATION IT CONTAINS MAY BE USED BY OR DISCLOSED TO ANY THIRD PARTY WITHOUT PRIOR WRITTEN CONSENT OF COMPAL ELECTRONICS, INC.

Compal Electronics, Inc.

Title: SB200M(2/4) - IDE/USB/MII

Size	Document Number	Rev
	LA-2411	0.1

Date: Tuesday, June 08, 2004 | Sheet 27 of 65

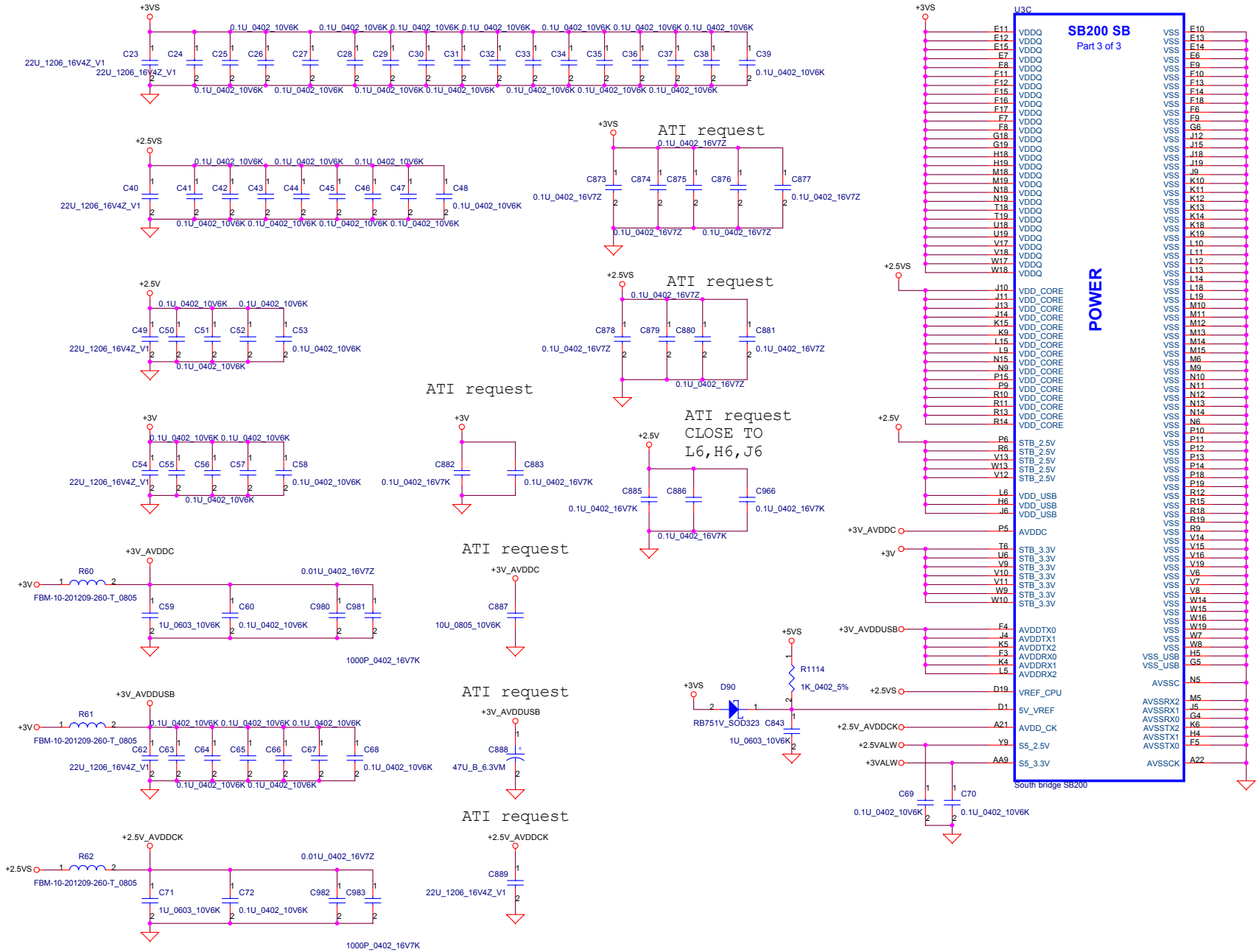

THIS SHEET OF ENGINEERING DRAWING IS THE PROPRIETARY PROPERTY OF COMPAL ELECTRONICS, INC. AND CONTAINS CONFIDENTIAL AND TRADE SECRET INFORMATION. THIS SHEET MAY NOT BE TRANSFERED FROM THE CUSTODY OF THE COMPETENT DIVISION OF R&D DEPARTMENT EXCEPT AS AUTHORIZED BY COMPAL ELECTRONICS, INC. NEITHER THIS SHEET NOR THE INFORMATION IT CONTAINS MAY BE USED BY OR DISCLOSED TO ANY THIRD PARTY WITHOUT PRIOR WRITTEN CONSENT OF COMPAL ELECTRONICS, INC.

Compal Electronics, Inc.	
Title	SB200M(3/4) - PWR
Size	Document Number: LA-2411
Rev	0.1
Date: Tuesday, June 08, 2004	Sheet 28 of 65

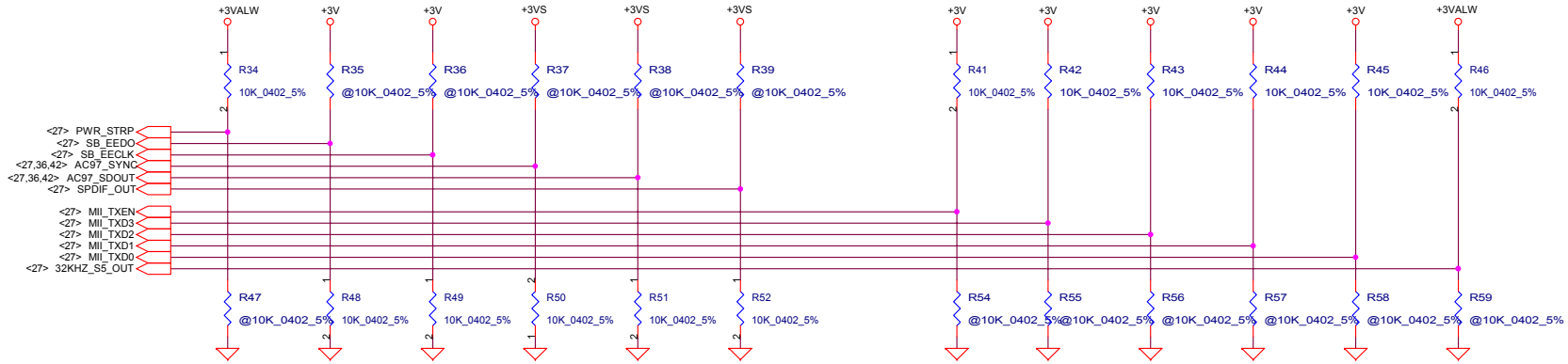

REQUIRED SYSTEM STRAPS

	PWR_STRP	IGN DEBUG EEDO	EECK	AC_SYNC	AC_SDOUT	SPDIF_OUT	SPEEDSTEP CPU_STP#	FREQLTCH TX_EN	ETHERNET TXD[3:0]	32KHZ_S5
STRAP HIGH	MANUAL PWR ON DEFAULT	USE DEBUG STRAPS	ROM ON PCI BUS	INIT ACTIVE HIGH	33MHz NB BUS	SIO 24MHz	ENABLE SPEED STEP	DISABLE CPU FREQ SETTING DEFAULT	PROCESSOR FREQ MULTIPLIER	32KHZ OUTPUT FROM SB200 (INT RTC) DEFAULT
STRAP LOW	AUTO PWR ON	IGNORE DEBUG STRAPS DEFAULT	ROM ON LPC BUS DEFAULT	INIT ACTIVE LOW (PIII) DEFAULT	HI SPEED A-LINK DEFAULT	SIO 48MHz DEFAULT	DISABLE SPEED STEP DEFAULT	ENABLE CPU FREQSETTING		32KHZ INPUT TO SB200 (EXT RTC)

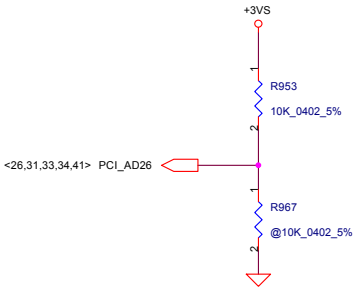

High : ENE910
Low : NS591L

THIS SHEET OF ENGINEERING DRAWING IS THE PROPRIETARY PROPERTY OF COMPAL ELECTRONICS, INC. AND CONTAINS CONFIDENTIAL AND TRADE SECRET INFORMATION. THIS SHEET MAY NOT BE TRANSFERED FROM THE CUSTODY OF THE COMPETENT DIVISION OF R&D DEPARTMENT EXCEPT AS AUTHORIZED BY COMPAL ELECTRONICS, INC. NEITHER THIS SHEET NOR THE INFORMATION IT CONTAINS MAY BE USED BY OR DISCLOSED TO ANY THIRD PARTY WITHOUT PRIOR WRITTEN CONSENT OF COMPAL ELECTRONICS, INC.

Compal Electronics, Inc.
Title: SB200M(4/4) - STRAPS
Size: | Document Number: LA-2411 | Rev: 0.1
Date: Tuesday, June 08, 2004 | Sheet 29 of 65

HDD/CD-ROM Module

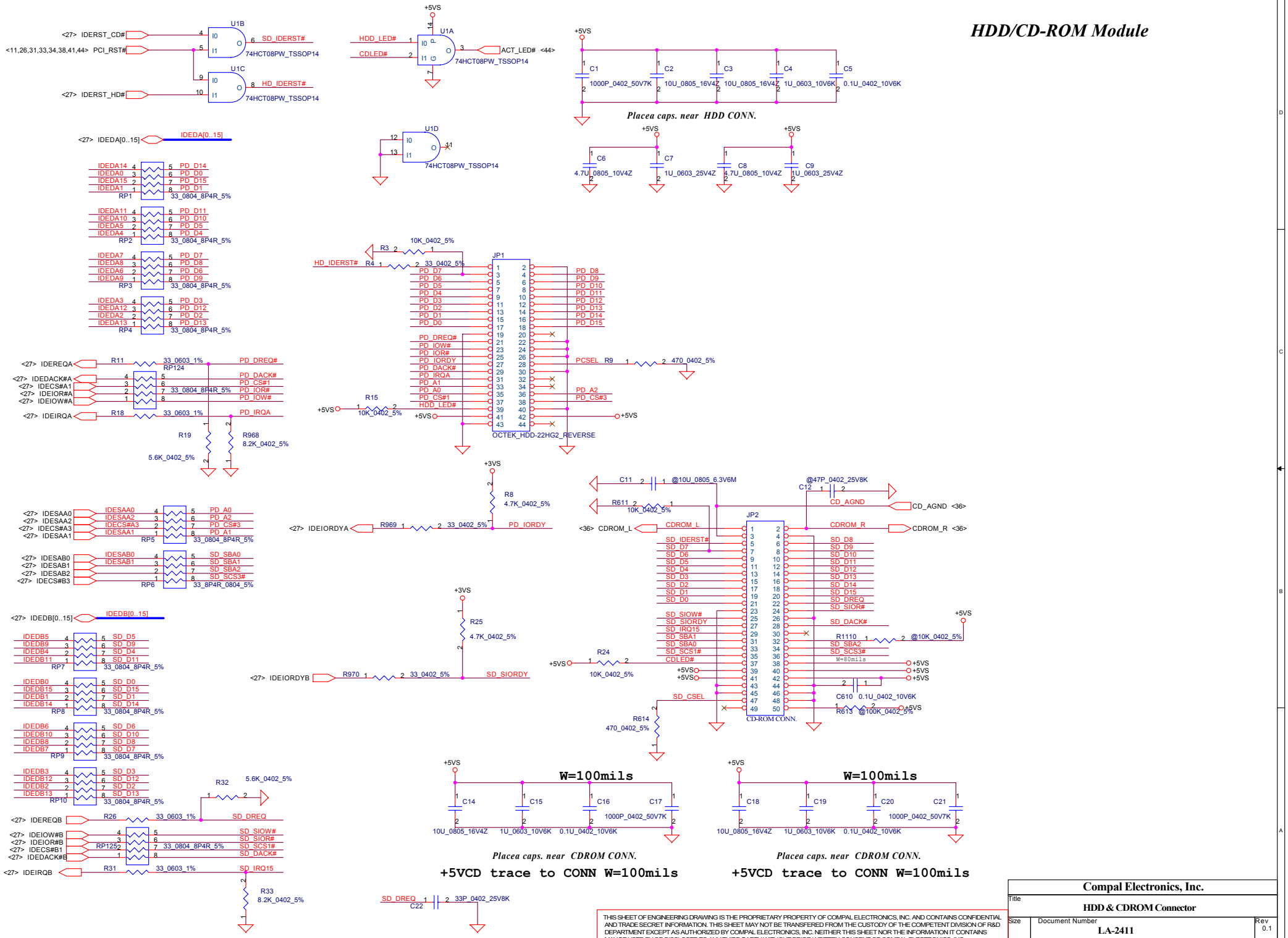

Compal Electronics, Inc.	
Title	HDD & CDROM Connector
Size	Document Number: LA-2411 — Rev 0.1
Date: Tuesday, June 08, 2004	Sheet 30 of 65

THIS SHEET OF ENGINEERING DRAWING IS THE PROPRIETARY PROPERTY OF COMPAL ELECTRONICS, INC. AND CONTAINS CONFIDENTIAL AND TRADE SECRET INFORMATION. THIS SHEET MAY NOT BE TRANSFERED FROM THE CUSTODY OF THE COMPETENT DIVISION OF R&D DEPARTMENT EXCEPT AS AUTHORIZED BY COMPAL ELECTRONICS, INC. NEITHER THIS SHEET NOR THE INFORMATION IT CONTAINS MAY BE USED BY OR DISCLOSED TO ANY THIRD PARTY WITHOUT PRIOR WRITTEN CONSENT OF COMPAL ELECTRONICS, INC.

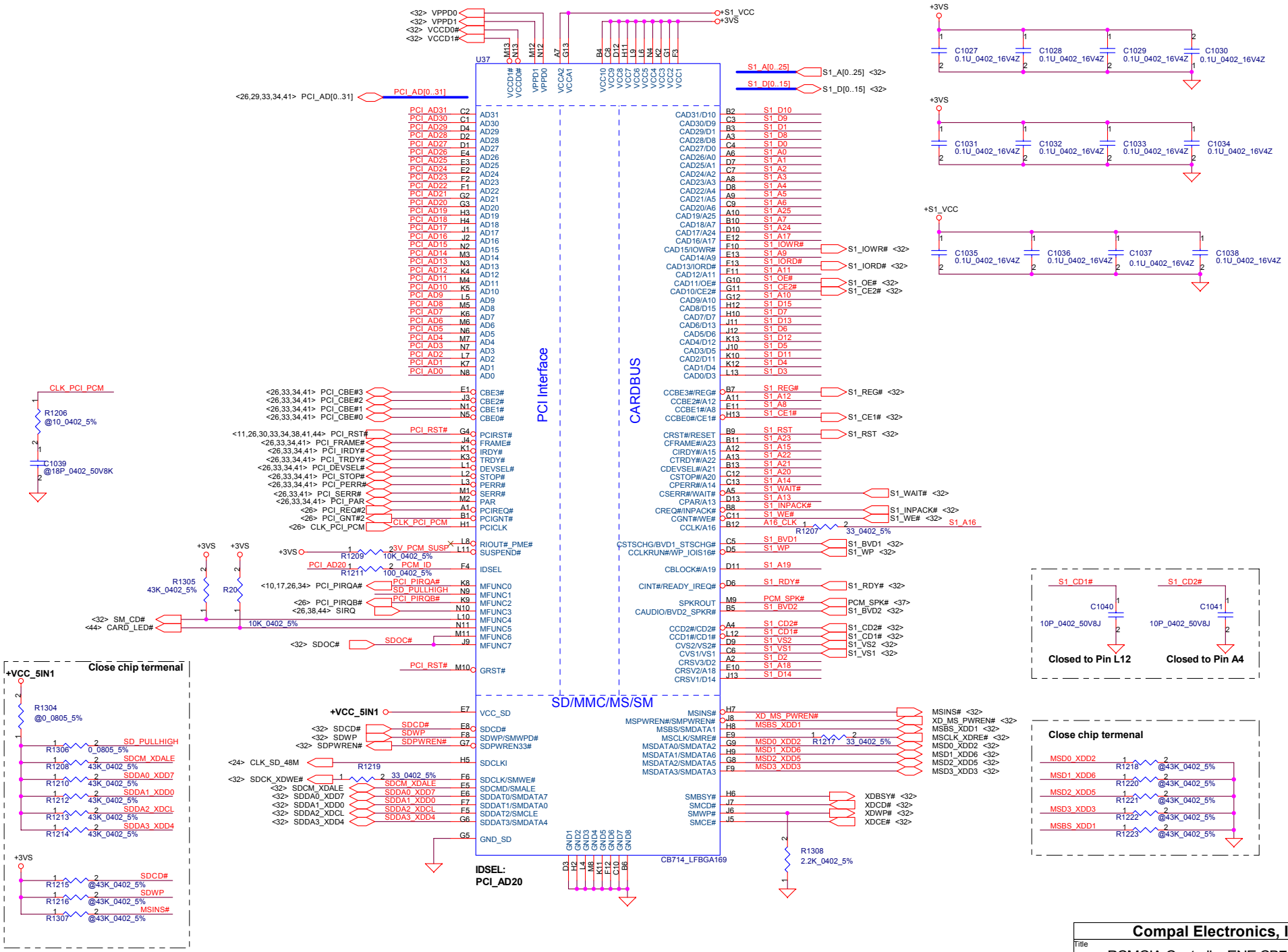

THIS SHEET OF ENGINEERING DRAWING IS THE PROPRIETARY PROPERTY OF COMPAL ELECTRONICS, INC. AND CONTAINS CONFIDENTIAL AND TRADE SECRET INFORMATION. THIS SHEET MAY NOT BE TRANSFERED FROM THE CUSTODY OF THE COMPETENT DIVISION OF R&D DEPARTMENT EXCEPT AS AUTHORIZED BY COMPAL ELECTRONICS, INC. NEITHER THIS SHEET NOR THE INFORMATION IT CONTAINS MAY BE USED BY OR DISCLOSED TO ANY THIRD PARTY WITHOUT PRIOR WRITTEN CONSENT OF COMPAL ELECTRONICS, INC.

Compal Electronics, Inc.	
Title	PCMCIA Controller ENE CB714
Size: Custom	Document Number: LA-2411
Rev	0.1
Date: Tuesday, June 08, 2004	Sheet 31 of 65

PCMCIA Power Controller

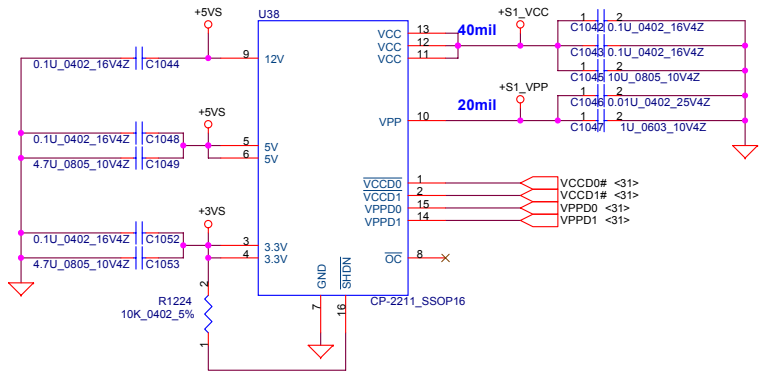

CardBus Socket

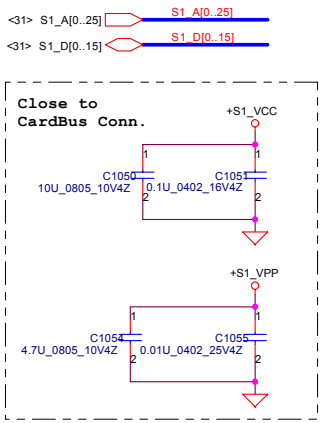

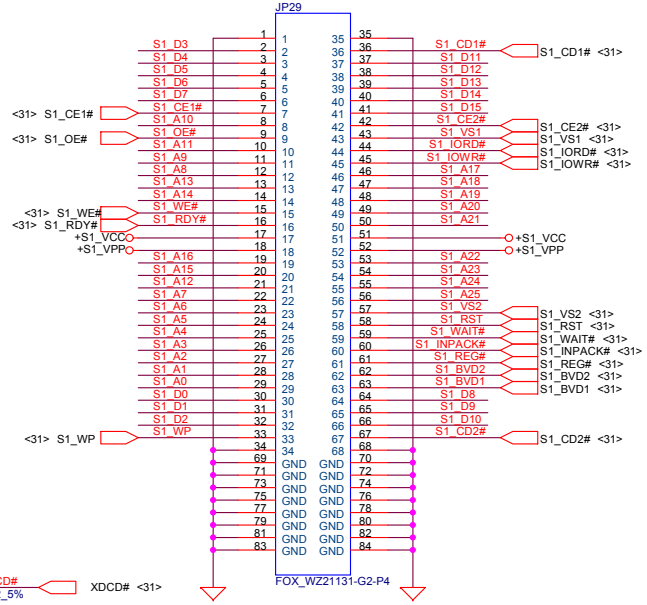

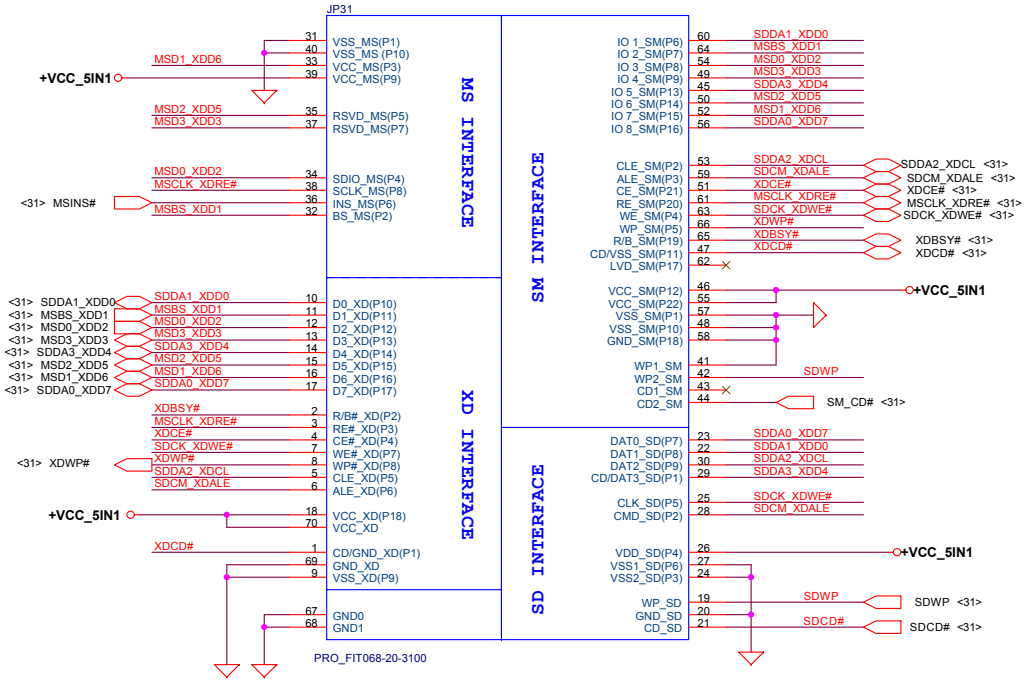

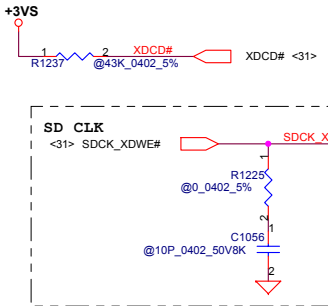

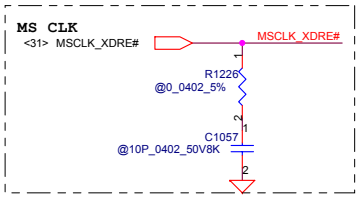

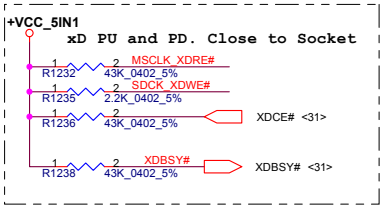

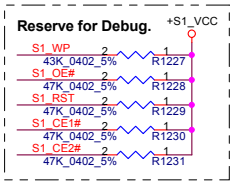

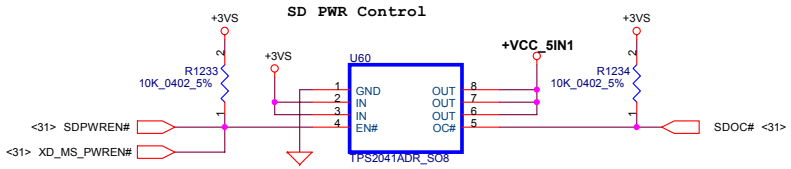

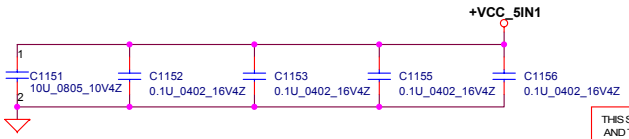

THIS SHEET OF ENGINEERING DRAWING IS THE PROPRIETARY PROPERTY OF COMPAL ELECTRONICS, INC. AND CONTAINS CONFIDENTIAL AND TRADE SECRET INFORMATION. THIS SHEET MAY NOT BE TRANSFERED FROM THE CUSTODY OF THE COMPETENT DIVISION OF R&D DEPARTMENT EXCEPT AS AUTHORIZED BY COMPAL ELECTRONICS, INC. NEITHER THIS SHEET NOR THE INFORMATION IT CONTAINS MAY BE USED BY OR DISCLOSED TO ANY THIRD PARTY WITHOUT PRIOR WRITTEN CONSENT OF COMPAL ELECTRONICS, INC.

Compal Electronics, Inc.			
Title: PCMCIA Socket			
Size: Custom	Document Number: LA-2411		Rev: 0.1
Date: Tuesday, June 08, 2004	Sheet 32 of 65		

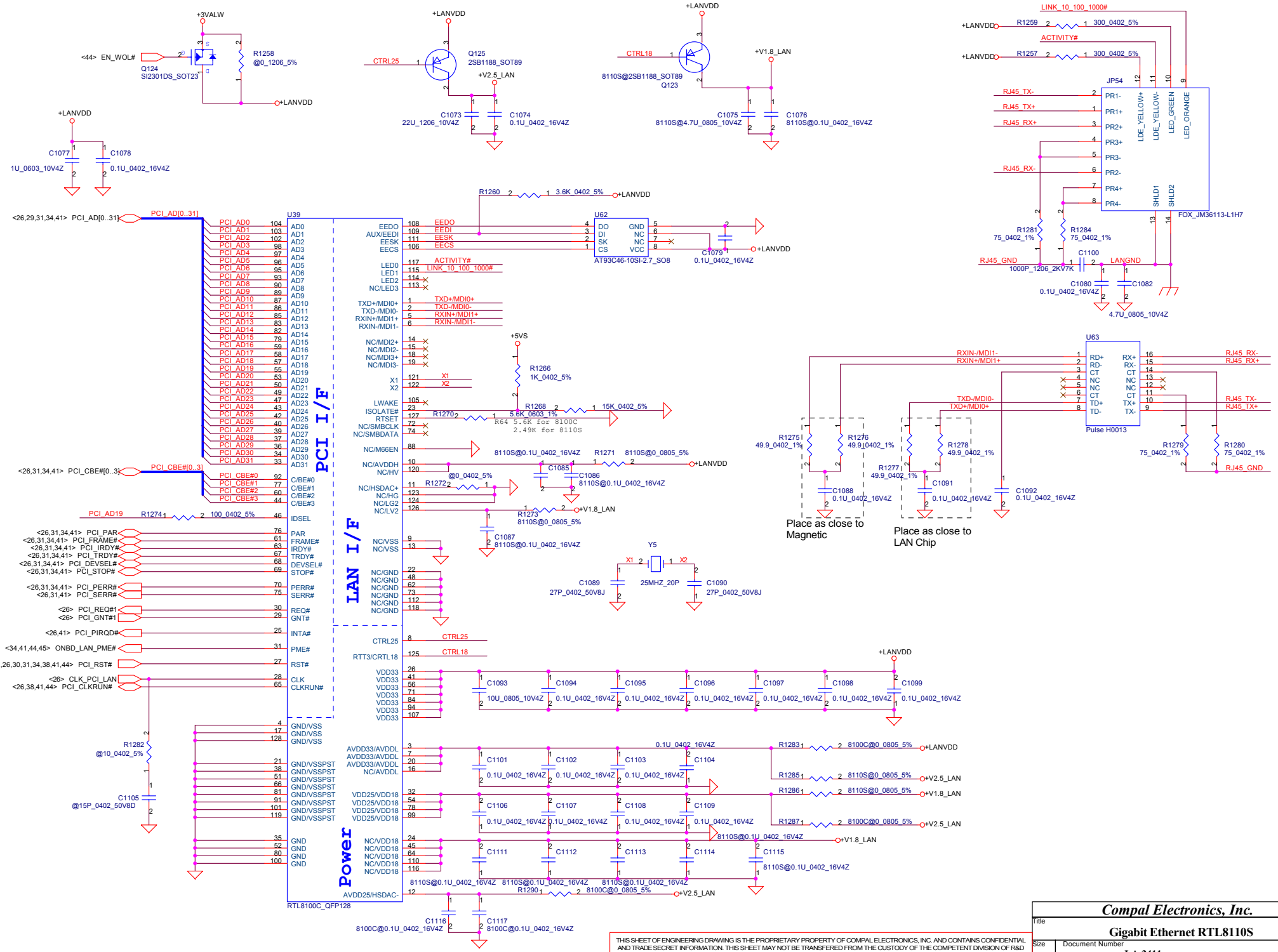

THIS SHEET OF ENGINEERING DRAWING IS THE PROPRIETARY PROPERTY OF COMPAL ELECTRONICS, INC. AND CONTAINS CONFIDENTIAL AND TRADE SECRET INFORMATION. THIS SHEET MAY NOT BE TRANSFERED FROM THE CUSTODY OF THE COMPETENT DIVISION OF R&D DEPARTMENT EXCEPT AS AUTHORIZED BY COMPAL ELECTRONICS, INC. NEITHER THIS SHEET NOR THE INFORMATION IT CONTAINS MAY BE USED BY OR DISCLOSED TO ANY THIRD PARTY WITHOUT PRIOR WRITTEN CONSENT OF COMPAL ELECTRONICS, INC.

Compal Electronics, Inc.	
Title	Gigabit Ethernet RTL8110S
Size	Document Number: LA-2411 — Rev 0.1
Date: Tuesday, June 08, 2004	Sheet 33 of 65

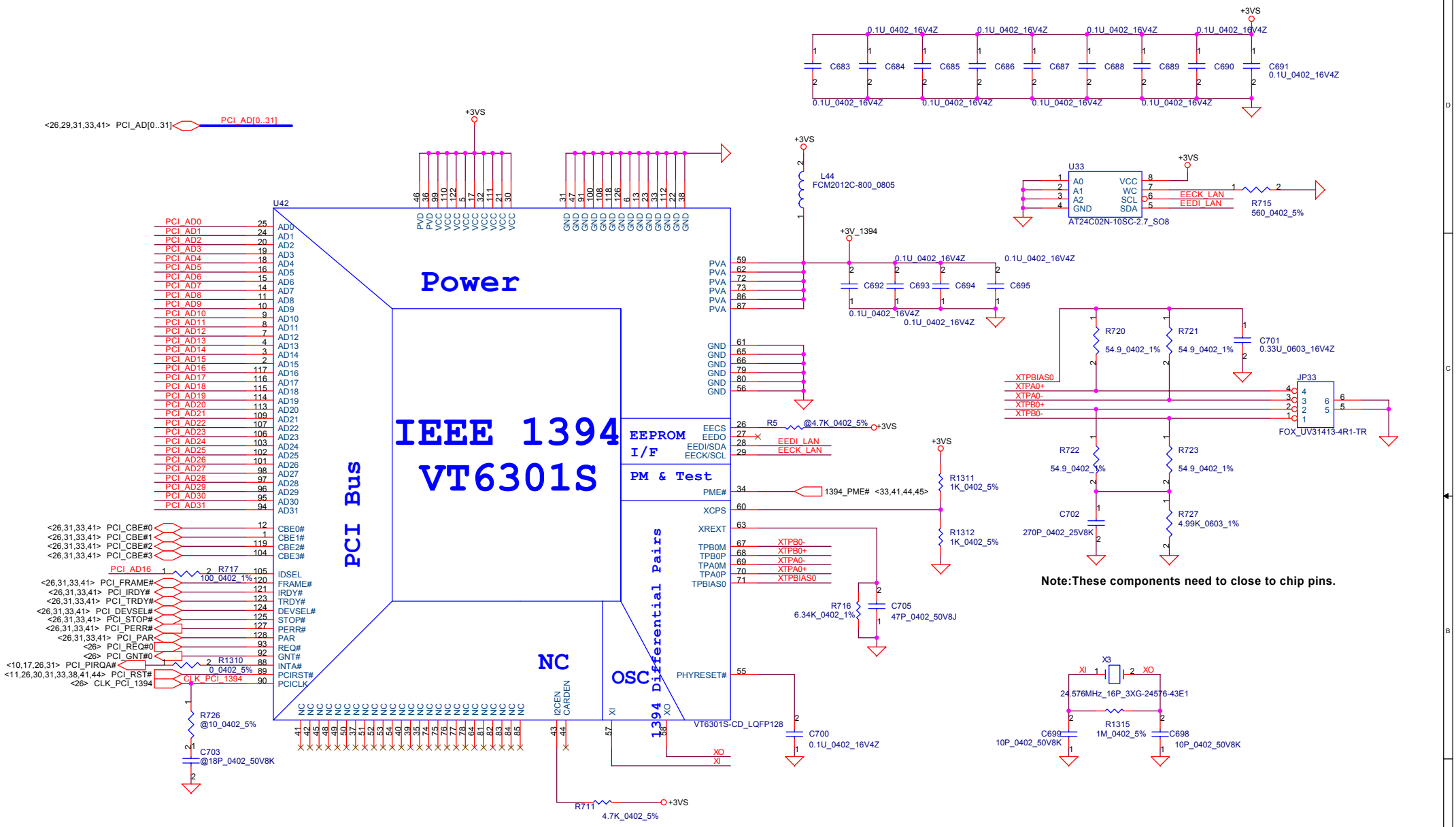

THIS SHEET OF ENGINEERING DRAWING IS THE PROPRIETARY PROPERTY OF COMPAL ELECTRONICS, INC. AND CONTAINS CONFIDENTIAL AND TRADE SECRET INFORMATION. THIS SHEET MAY NOT BE TRANSFERED FROM THE CUSTODY OF THE COMPETENT DIVISION OF R&D DEPARTMENT EXCEPT AS AUTHORIZED BY COMPAL ELECTRONICS, INC. NEITHER THIS SHEET NOR THE INFORMATION IT CONTAINS MAY BE USED BY OR DISCLOSED TO ANY THIRD PARTY WITHOUT PRIOR WRITTEN CONSENT OF COMPAL ELECTRONICS, INC.

Compal Electronics, Inc.	
Title	IEEE 1394 CONTROLLER
Size	Document Number: LA-2411 — Rev 0.1
Date: Tuesday, June 08, 2004	Sheet 34 of 65

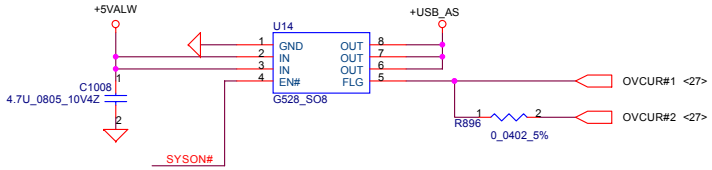

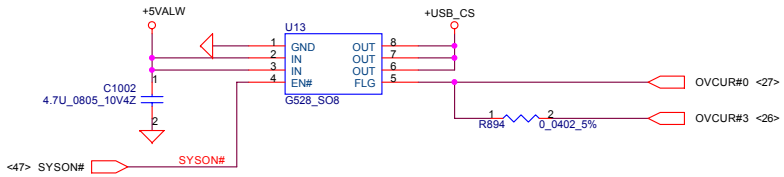

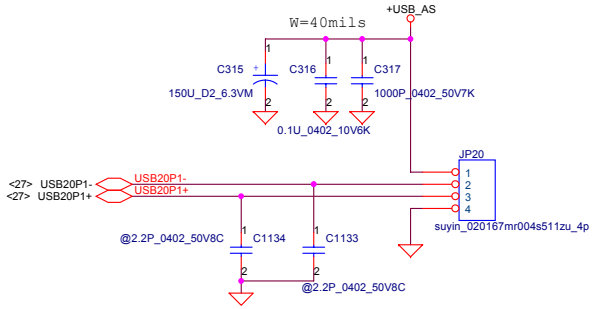

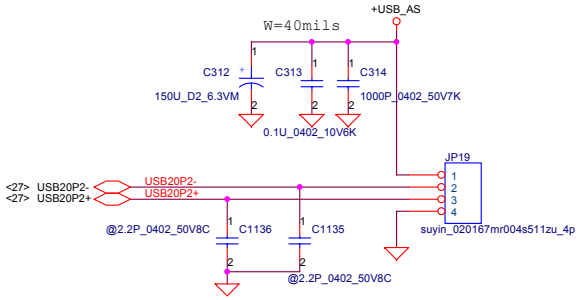

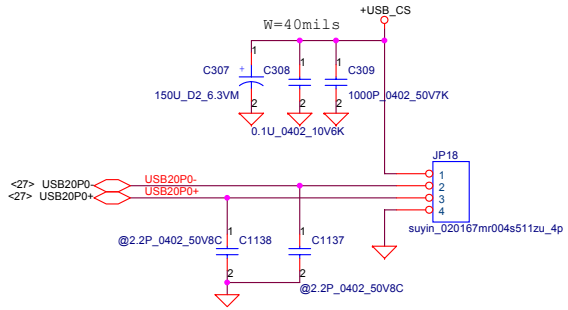

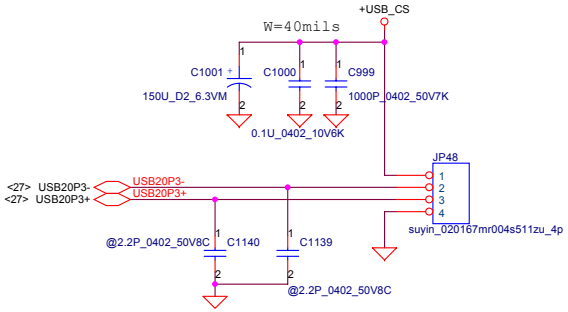

THIS SHEET OF ENGINEERING DRAWING IS THE PROPRIETARY PROPERTY OF COMPAL ELECTRONICS, INC. AND CONTAINS CONFIDENTIAL AND TRADE SECRET INFORMATION. THIS SHEET MAY NOT BE TRANSFERED FROM THE CUSTODY OF THE COMPETENT DIVISION OF R&D DEPARTMENT EXCEPT AS AUTHORIZED BY COMPAL ELECTRONICS, INC. NEITHER THIS SHEET NOR THE INFORMATION IT CONTAINS MAY BE USED BY OR DISCLOSED TO ANY THIRD PARTY WITHOUT PRIOR WRITTEN CONSENT OF COMPAL ELECTRONICS, INC.

Compal Electronics, Inc.

Title	USB2.0 Connector	
Size	Document Number: LA-2411	Rev 0.1
Date: Tuesday, June 08, 2004	Sheet 35 of 65	

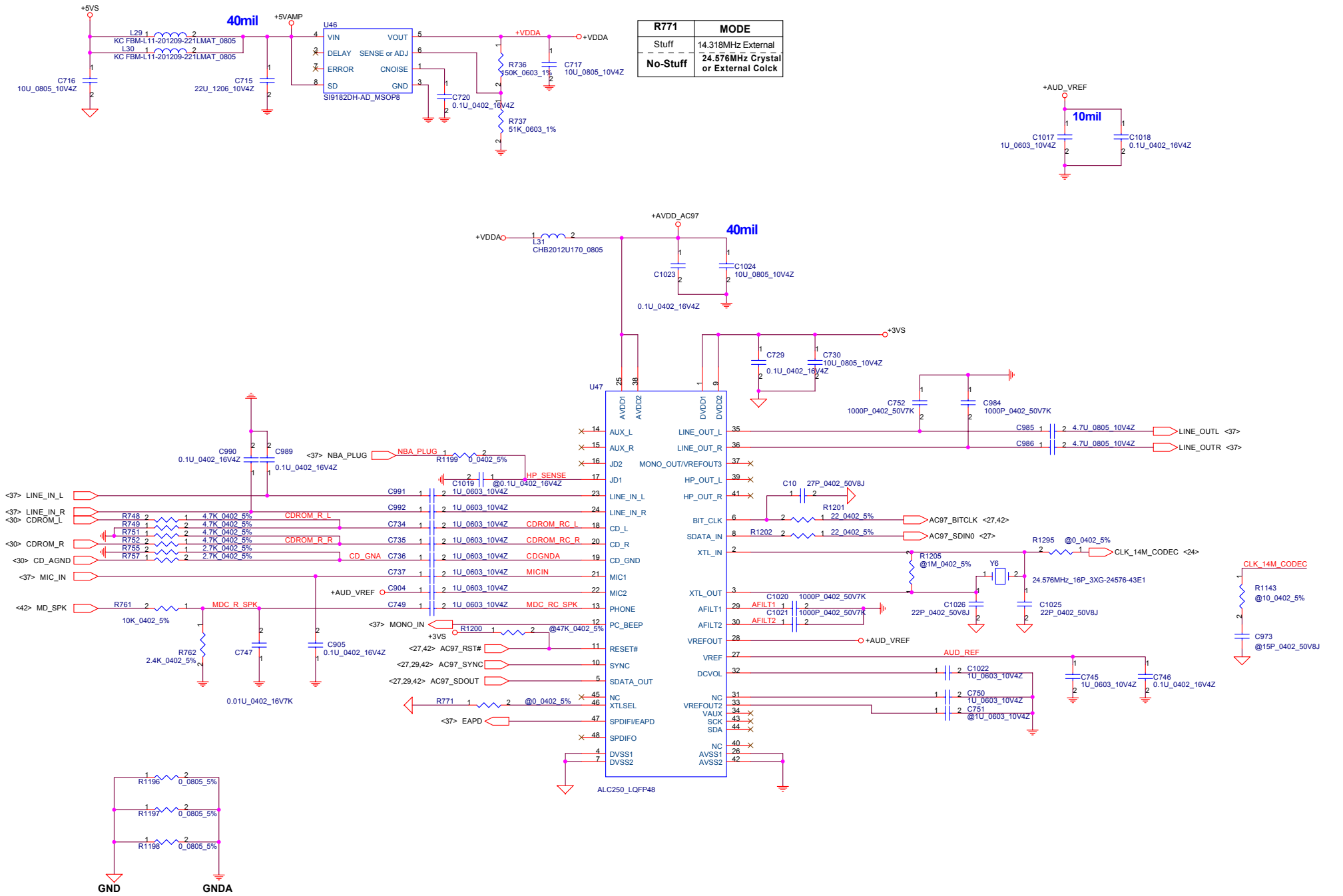

THIS SHEET OF ENGINEERING DRAWING IS THE PROPRIETARY PROPERTY OF COMPAL ELECTRONICS, INC. AND CONTAINS CONFIDENTIAL AND TRADE SECRET INFORMATION. THIS SHEET MAY NOT BE TRANSFERED FROM THE CUSTODY OF THE COMPETENT DIVISION OF R&D DEPARTMENT EXCEPT AS AUTHORIZED BY COMPAL ELECTRONICS, INC. NEITHER THIS SHEET NOR THE INFORMATION IT CONTAINS MAY BE USED BY OR DISCLOSED TO ANY THIRD PARTY WITHOUT PRIOR WRITTEN CONSENT OF COMPAL ELECTRONICS, INC.

Compal Electronics, Inc.	
Title	AC97 CODEC
Size: Custom	Document Number: LA-2411
Rev	0.1
Date: Tuesday, June 08, 2004	Sheet 36 of 65

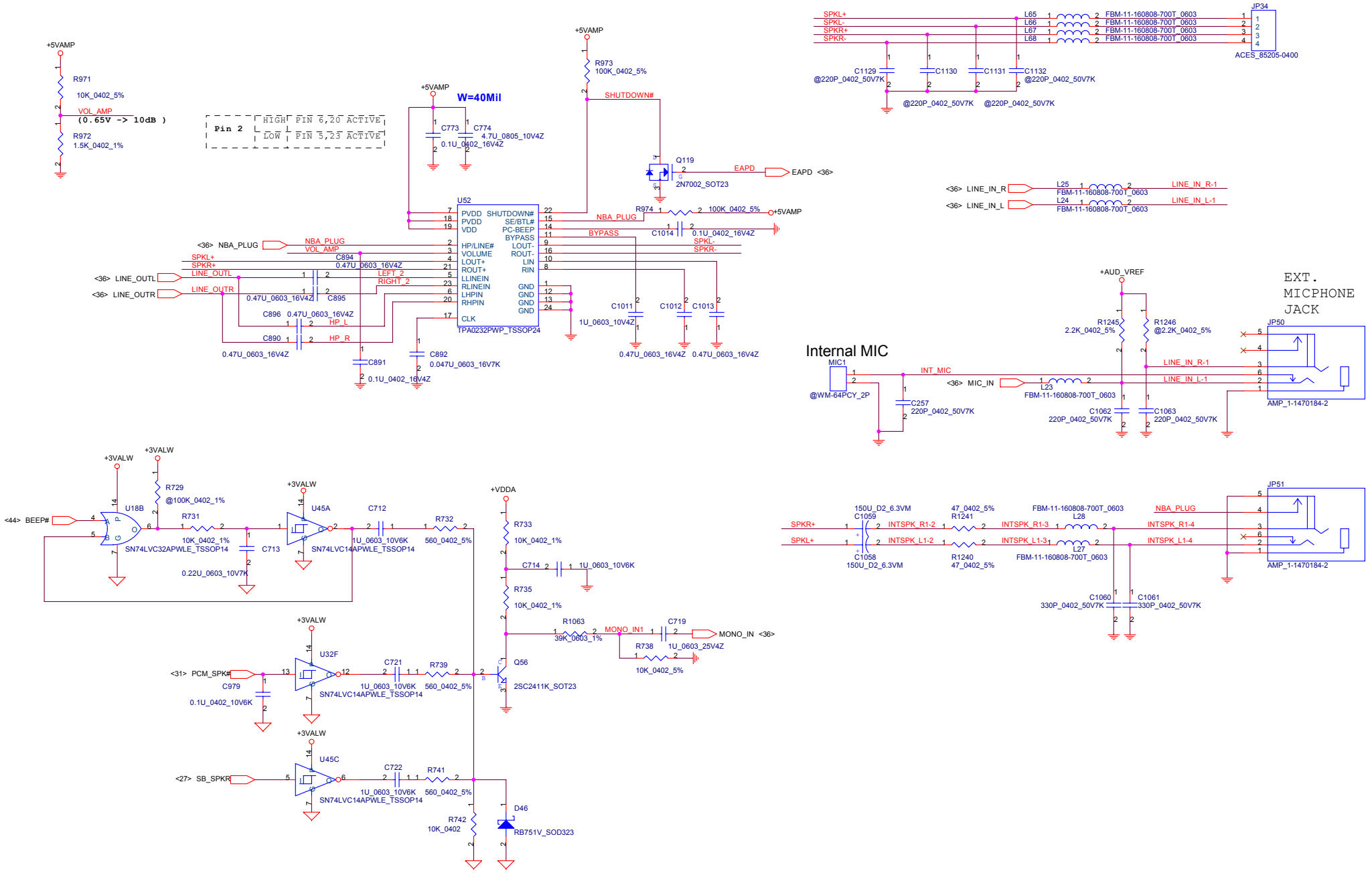

THIS SHEET OF ENGINEERING DRAWING IS THE PROPRIETARY PROPERTY OF COMPAL ELECTRONICS, INC. AND CONTAINS CONFIDENTIAL AND TRADE SECRET INFORMATION. THIS SHEET MAY NOT BE TRANSFERED FROM THE CUSTODY OF THE COMPETENT DIVISION OF R&D DEPARTMENT EXCEPT AS AUTHORIZED BY COMPAL ELECTRONICS, INC. NEITHER THIS SHEET NOR THE INFORMATION IT CONTAINS MAY BE USED BY OR DISCLOSED TO ANY THIRD PARTY WITHOUT PRIOR WRITTEN CONSENT OF COMPAL ELECTRONICS, INC.

Compal Electronics, Inc.

Title	AMP & Audio Jack	
Size	Document Number: LA-2411	Rev 0.1
Date: Tuesday, June 08, 2004	Sheet 37 of 65	

SUPER I/O SMsC FDC47N217

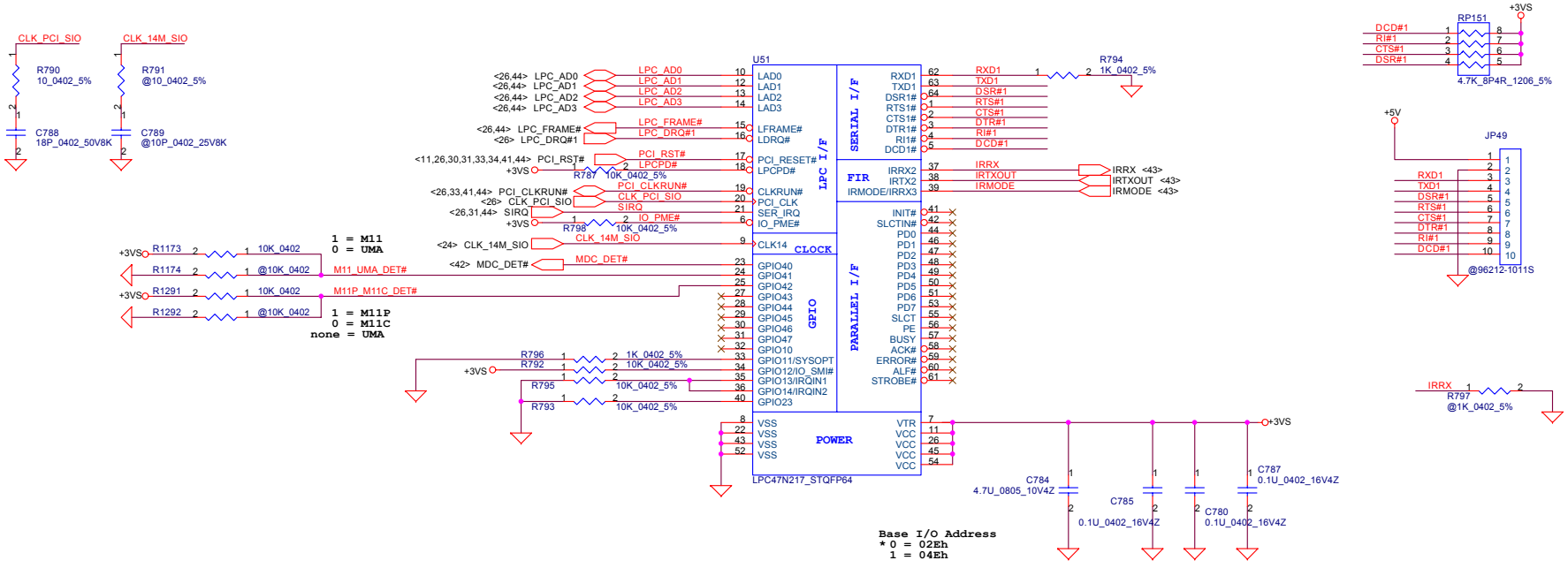

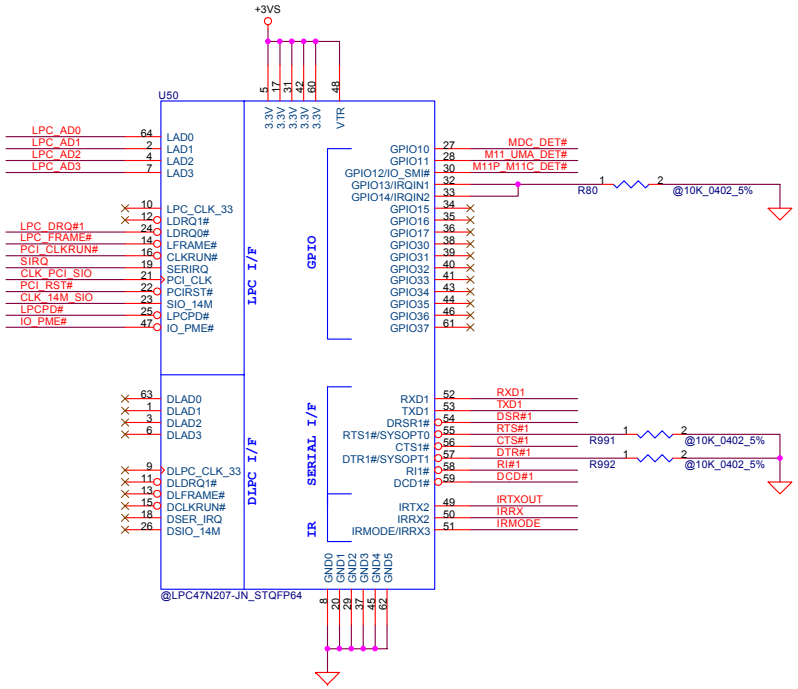

THIS SHEET OF ENGINEERING DRAWING IS THE PROPRIETARY PROPERTY OF COMPAL ELECTRONICS, INC. AND CONTAINS CONFIDENTIAL AND TRADE SECRET INFORMATION. THIS SHEET MAY NOT BE TRANSFERED FROM THE CUSTODY OF THE COMPETENT DIVISION OF R&D DEPARTMENT EXCEPT AS AUTHORIZED BY COMPAL ELECTRONICS, INC. NEITHER THIS SHEET NOR THE INFORMATION IT CONTAINS MAY BE USED BY OR DISCLOSED TO ANY THIRD PARTY WITHOUT PRIOR WRITTEN CONSENT OF COMPAL ELECTRONICS, INC.

Compal Electronics, Inc.

Title: LPC SUPER I/O VIA VT1211

Size: | Document Number: LA-2411 | Rev: 0.1

Date: Tuesday, June 08, 2004 | Sheet 38 of 65

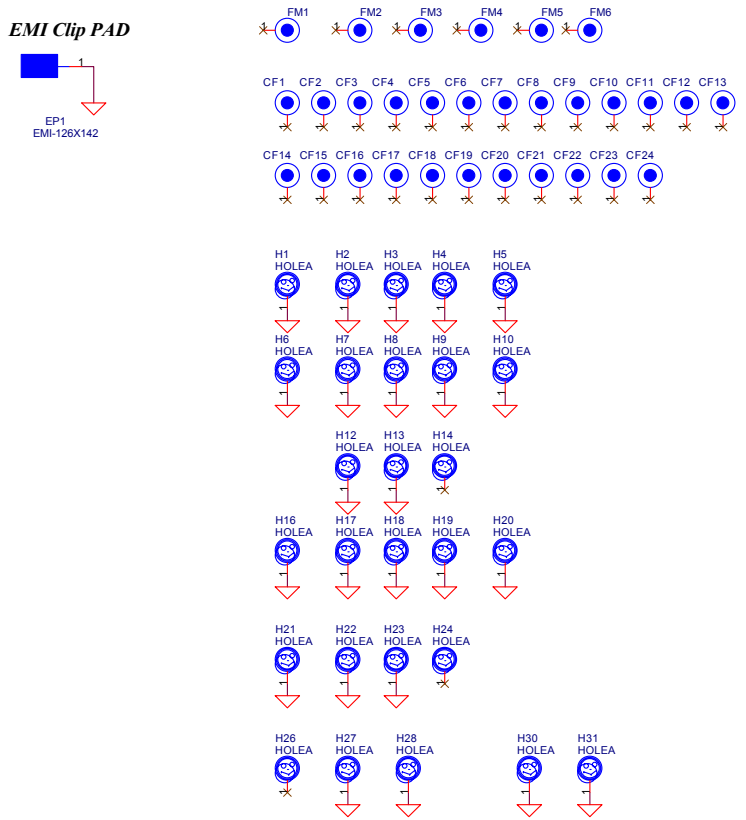

THIS SHEET OF ENGINEERING DRAWING IS THE PROPRIETARY PROPERTY OF COMPAL ELECTRONICS, INC. AND CONTAINS CONFIDENTIAL AND TRADE SECRET INFORMATION. THIS SHEET MAY NOT BE TRANSFERED FROM THE CUSTODY OF THE COMPETENT DIVISION OF R&D DEPARTMENT EXCEPT AS AUTHORIZED BY COMPAL ELECTRONICS, INC. NEITHER THIS SHEET NOR THE INFORMATION IT CONTAINS MAY BE USED BY OR DISCLOSED TO ANY THIRD PARTY WITHOUT PRIOR WRITTEN CONSENT OF COMPAL ELECTRONICS, INC.

Compal Electronics, Inc.		
Title: SPR Connector		
Size	Document Number: LA-2411	Rev 0.1
Date: Tuesday, June 08, 2004	Sheet 39 of 65	

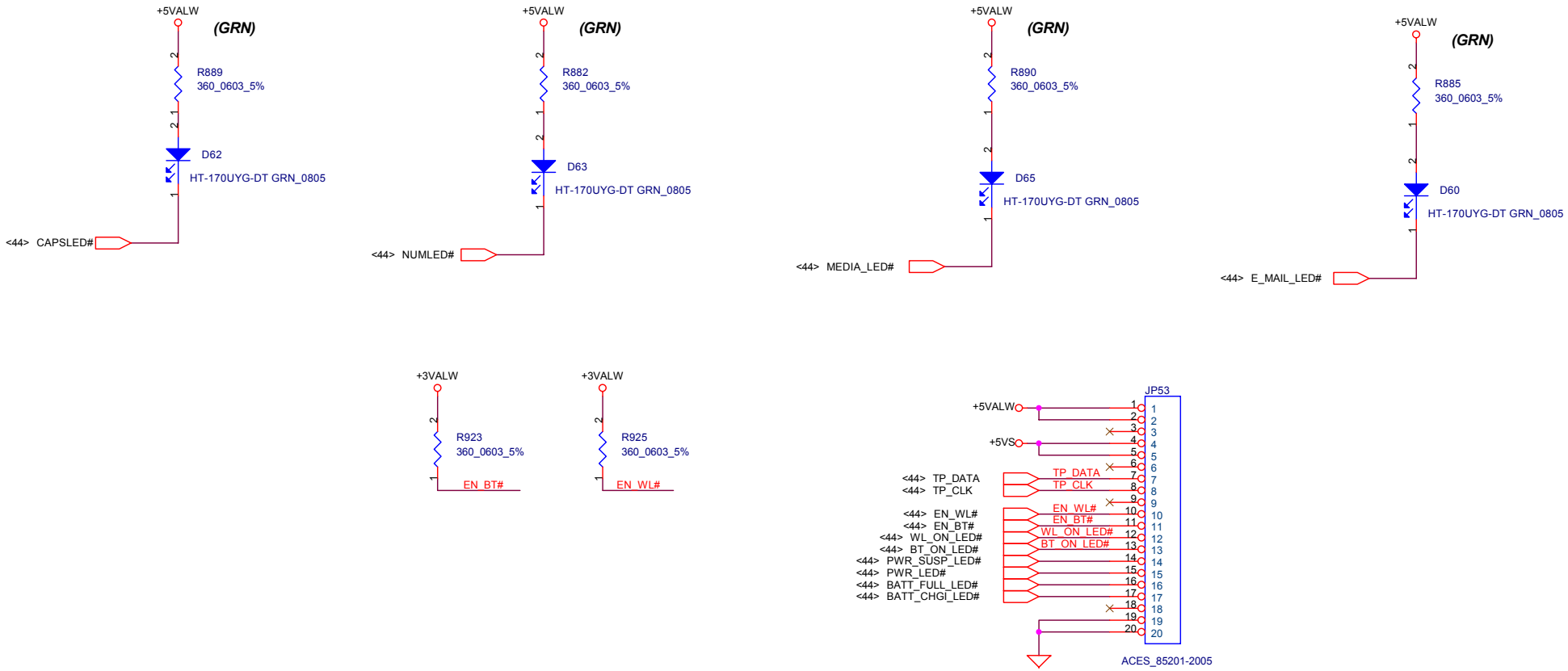

THIS SHEET OF ENGINEERING DRAWING IS THE PROPRIETARY PROPERTY OF COMPAL ELECTRONICS, INC. AND CONTAINS CONFIDENTIAL AND TRADE SECRET INFORMATION. THIS SHEET MAY NOT BE TRANSFERED FROM THE CUSTODY OF THE COMPETENT DIVISION OF R&D DEPARTMENT EXCEPT AS AUTHORIZED BY COMPAL ELECTRONICS, INC. NEITHER THIS SHEET NOR THE INFORMATION IT CONTAINS MAY BE USED BY OR DISCLOSED TO ANY THIRD PARTY WITHOUT PRIOR WRITTEN CONSENT OF COMPAL ELECTRONICS, INC.

Compal Electronics, Inc.		
Title: LED INDICATOR		
Size: B	Document Number: LA-2411	Rev: 0.1
Date: Tuesday, June 08, 2004	Sheet 40 of 65	

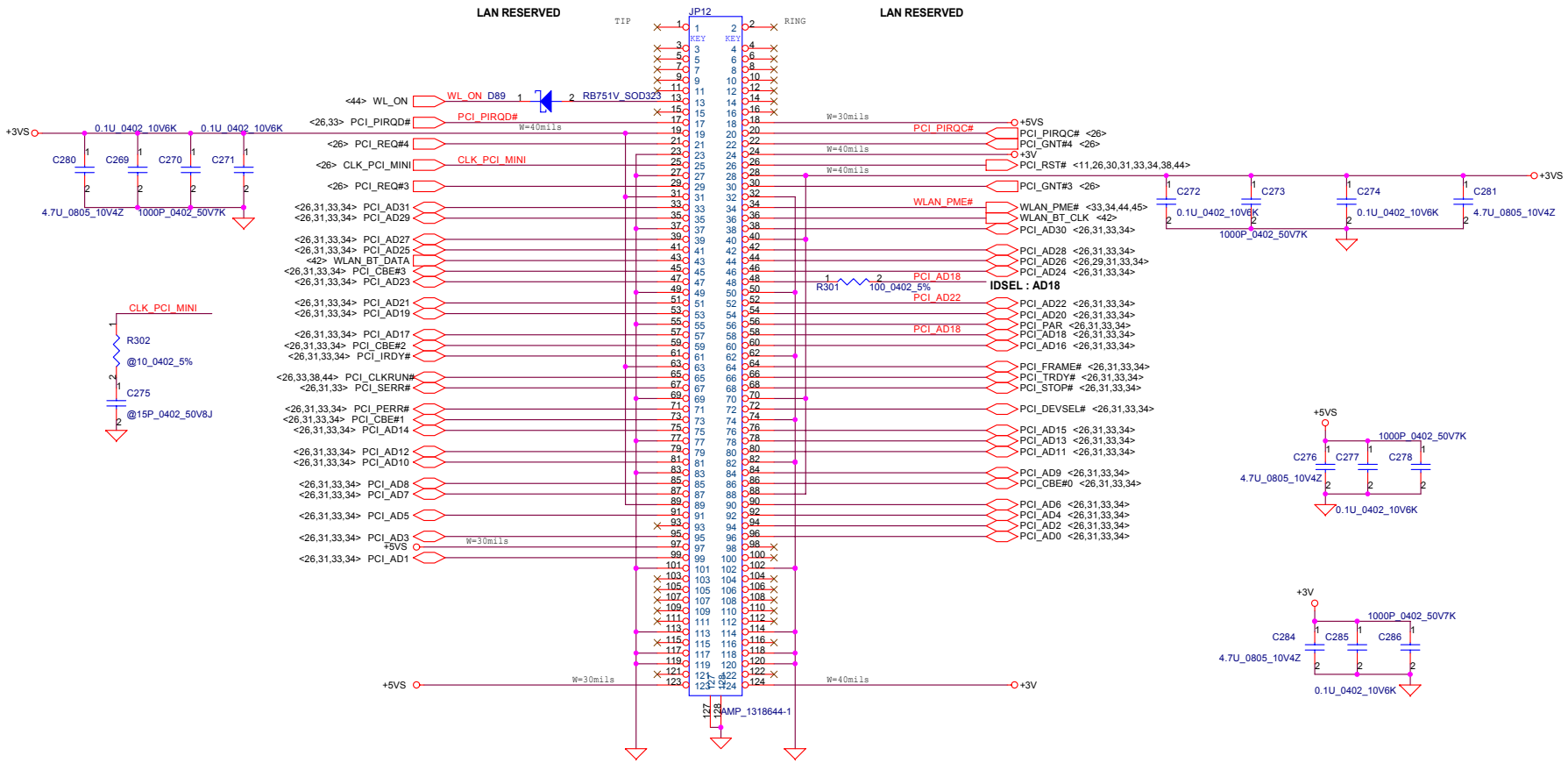

THIS SHEET OF ENGINEERING DRAWING IS THE PROPRIETARY PROPERTY OF COMPAL ELECTRONICS, INC. AND CONTAINS CONFIDENTIAL AND TRADE SECRET INFORMATION. THIS SHEET MAY NOT BE TRANSFERED FROM THE CUSTODY OF THE COMPETENT DIVISION OF R&D DEPARTMENT EXCEPT AS AUTHORIZED BY COMPAL ELECTRONICS, INC. NEITHER THIS SHEET NOR THE INFORMATION IT CONTAINS MAY BE USED BY OR DISCLOSED TO ANY THIRD PARTY WITHOUT PRIOR WRITTEN CONSENT OF COMPAL ELECTRONICS, INC.

Compal Electronics, Inc.

Title	Mini PCI Slot
Size	Document Number: LA-2411
Rev	0.1
Date:	Tuesday, June 08, 2004
Sheet	41 of 65

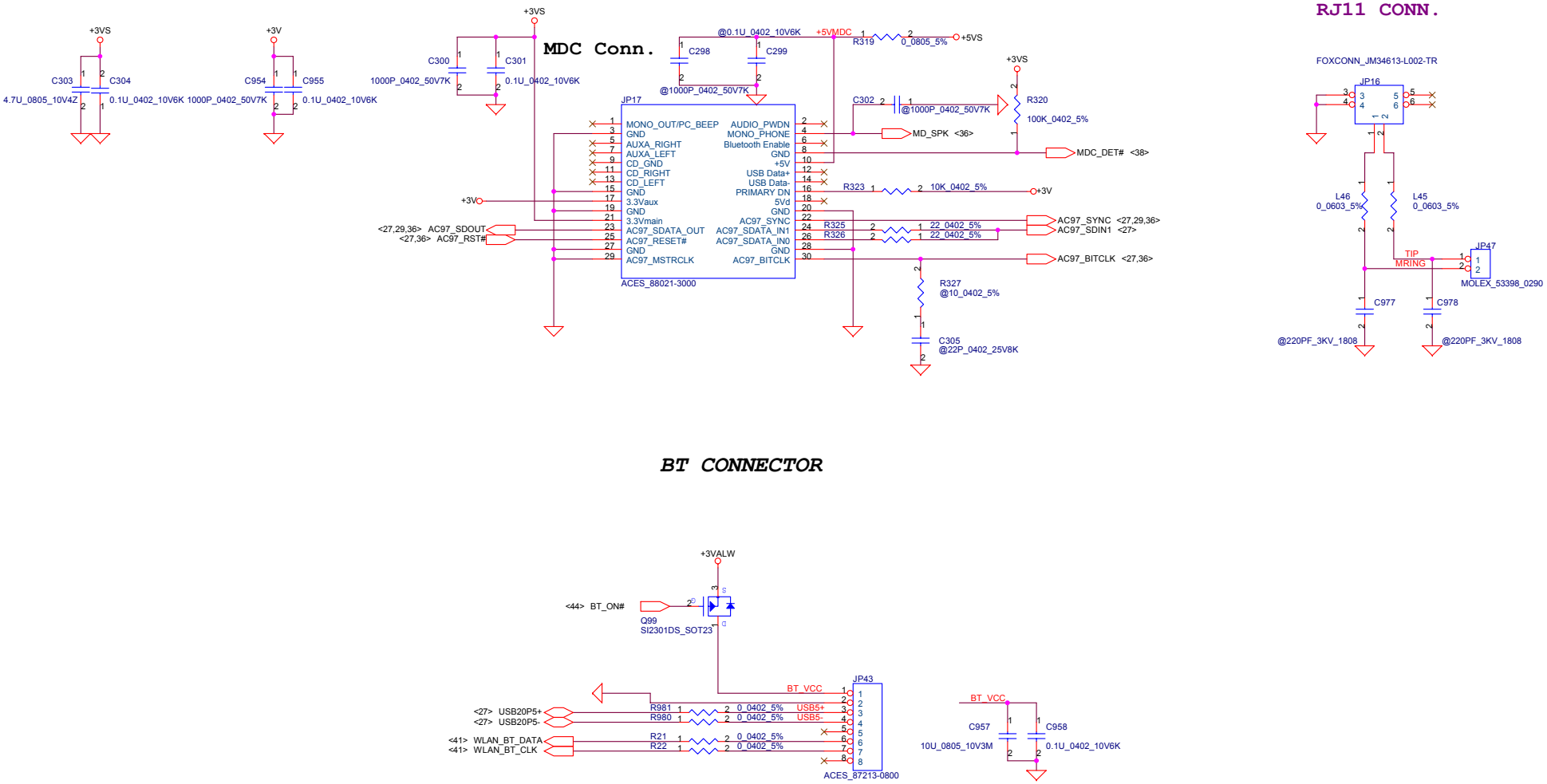

THIS SHEET OF ENGINEERING DRAWING IS THE PROPRIETARY PROPERTY OF COMPAL ELECTRONICS, INC. AND CONTAINS CONFIDENTIAL AND TRADE SECRET INFORMATION. THIS SHEET MAY NOT BE TRANSFERED FROM THE CUSTODY OF THE COMPETENT DIVISION OF R&D DEPARTMENT EXCEPT AS AUTHORIZED BY COMPAL ELECTRONICS, INC. NEITHER THIS SHEET NOR THE INFORMATION IT CONTAINS MAY BE USED BY OR DISCLOSED TO ANY THIRD PARTY WITHOUT PRIOR WRITTEN CONSENT OF COMPAL ELECTRONICS, INC.

Compal Electronics, Inc.			
Title	MDC , Bluetooth & USB CONN.		
Size	Document Number LA-2411		Rev 0.1
Date: Tuesday, June 08, 2004	Sheet 42 of 65		

INT_KBD CONN.

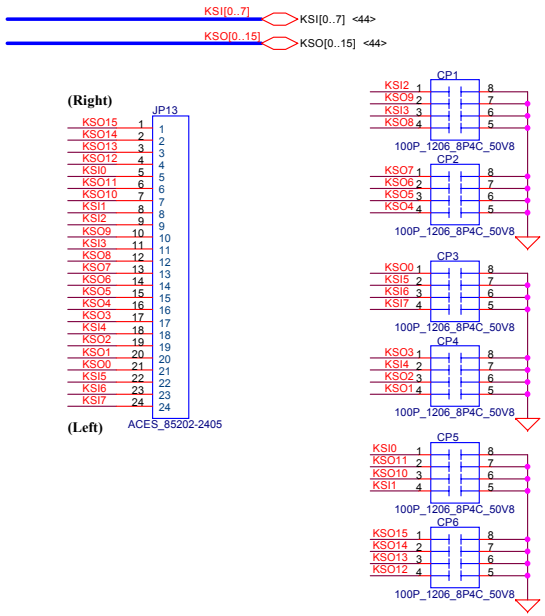

Power BTN

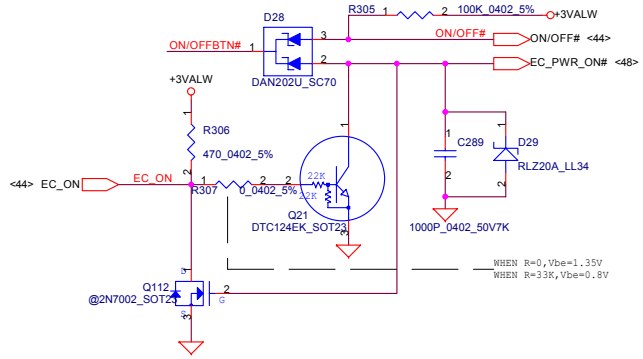

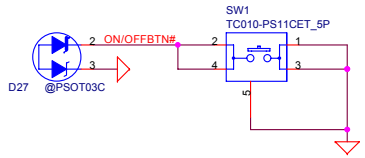

FIR Module

Vishay populate two 4.7 Ohm resistor
Agilent populate one 4.7 Ohm resistor

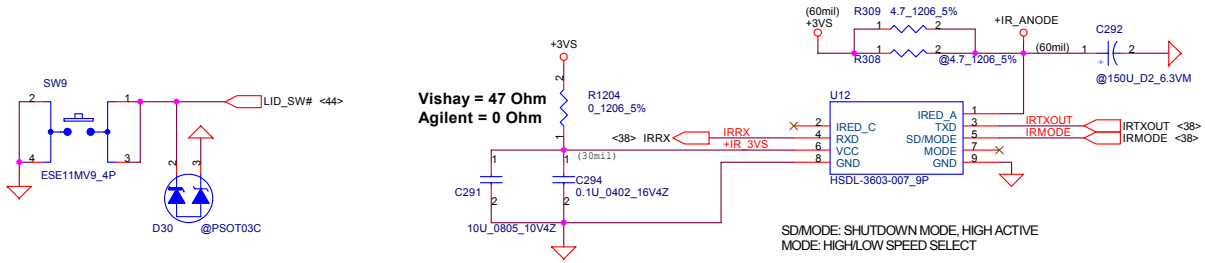

Console/E-MAIL Button

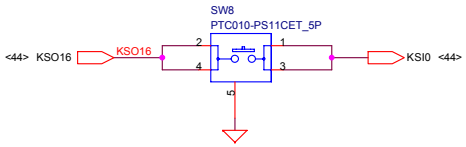

Internet Button

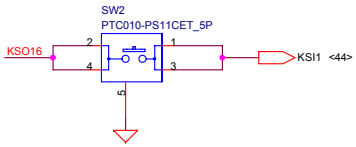

USER Button1

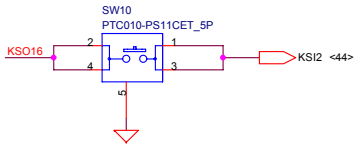

USER Button 2

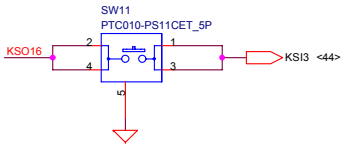

THIS SHEET OF ENGINEERING DRAWING IS THE PROPRIETARY PROPERTY OF COMPAL ELECTRONICS, INC. AND CONTAINS CONFIDENTIAL AND TRADE SECRET INFORMATION. THIS SHEET MAY NOT BE TRANSFERED FROM THE CUSTODY OF THE COMPETENT DIVISION OF R&D DEPARTMENT EXCEPT AS AUTHORIZED BY COMPAL ELECTRONICS, INC. NEITHER THIS SHEET NOR THE INFORMATION IT CONTAINS MAY BE USED BY OR DISCLOSED TO ANY THIRD PARTY WITHOUT PRIOR WRITTEN CONSENT OF COMPAL ELECTRONICS, INC.

Compal Electronics, Inc.		
Title: KBD,ON/OFF,T/P,LED & FIR		
Size	Document Number: LA-2411	Rev 0.1
Date: Tuesday, June 08, 2004	Sheet 43 of 65	

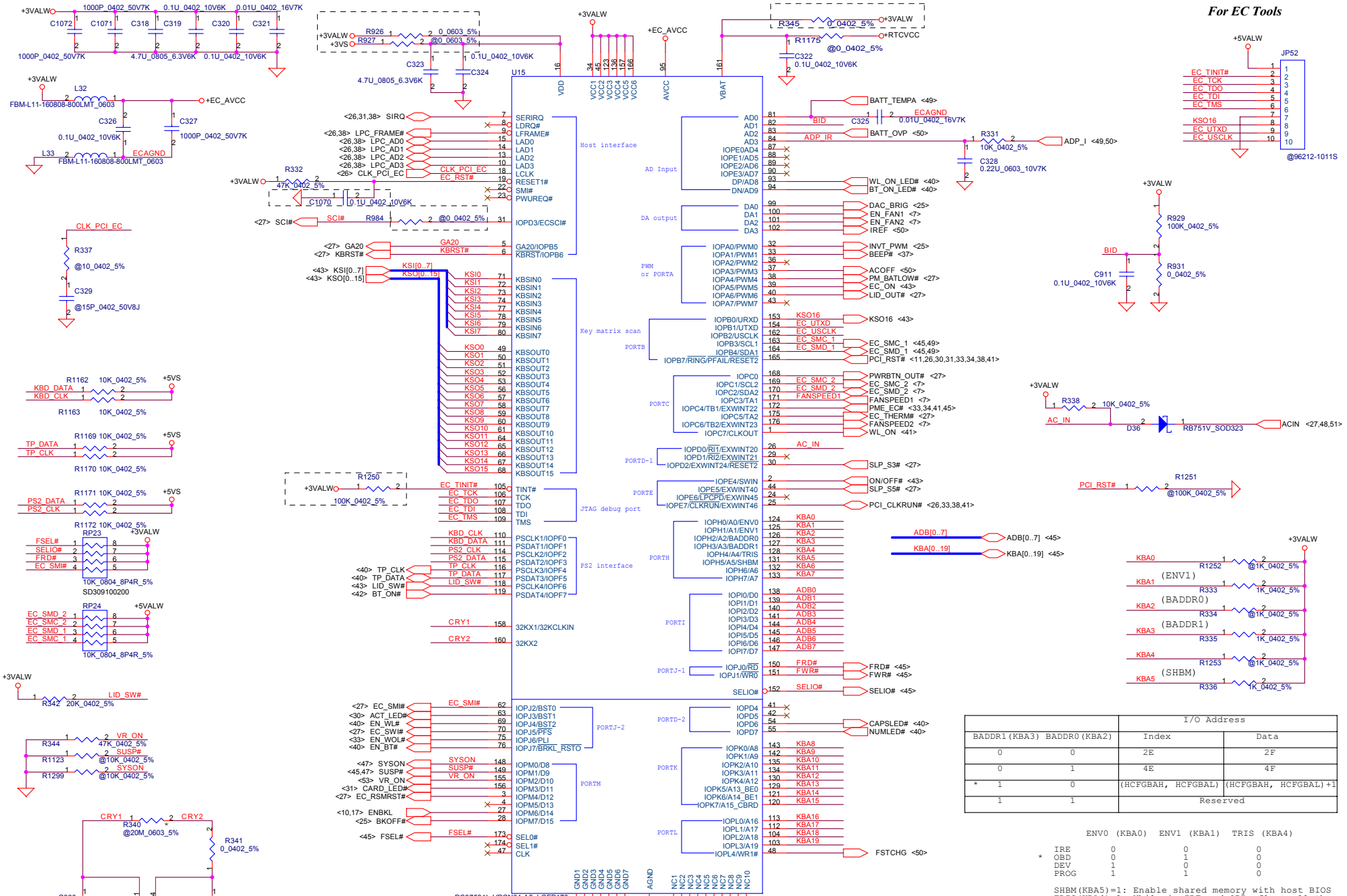

	KB910	87591
R341	0	120K
R340	no stuff	20M

		I/O Address	
BADDR1(KBA3)	BADDR0(KBA2)	Index	Data
0	0	2E	2F
0	1	4E	4F
* 1	0	(HCFGBAH, HCFGBAL)	(HCFGBAH, HCFGBAL)+1
1	1	Reserved	

	ENV0 (KBA0)	ENV1 (KBA1)	TRIS (KBA4)
IRE	0	0	0
* OBD	0	1	0
DEV	1	0	0
PROG	1	1	0

SHBM(KBA5)=1: Enable shared memory with host BIOS
TRIS(KBA4)=1: While in IRE and OBD, float all the signals for clip-on ISE use

THIS SHEET OF ENGINEERING DRAWING IS THE PROPRIETARY PROPERTY OF COMPAL ELECTRONICS, INC. AND CONTAINS CONFIDENTIAL AND TRADE SECRET INFORMATION. THIS SHEET MAY NOT BE TRANSFERED FROM THE CUSTODY OF THE COMPETENT DIVISION OF R&D DEPARTMENT EXCEPT AS AUTHORIZED BY COMPAL ELECTRONICS, INC. NEITHER THIS SHEET NOR THE INFORMATION IT CONTAINS MAY BE USED BY OR DISCLOSED TO ANY THIRD PARTY WITHOUT PRIOR WRITTEN CONSENT OF COMPAL ELECTRONICS, INC.

OUTPUT

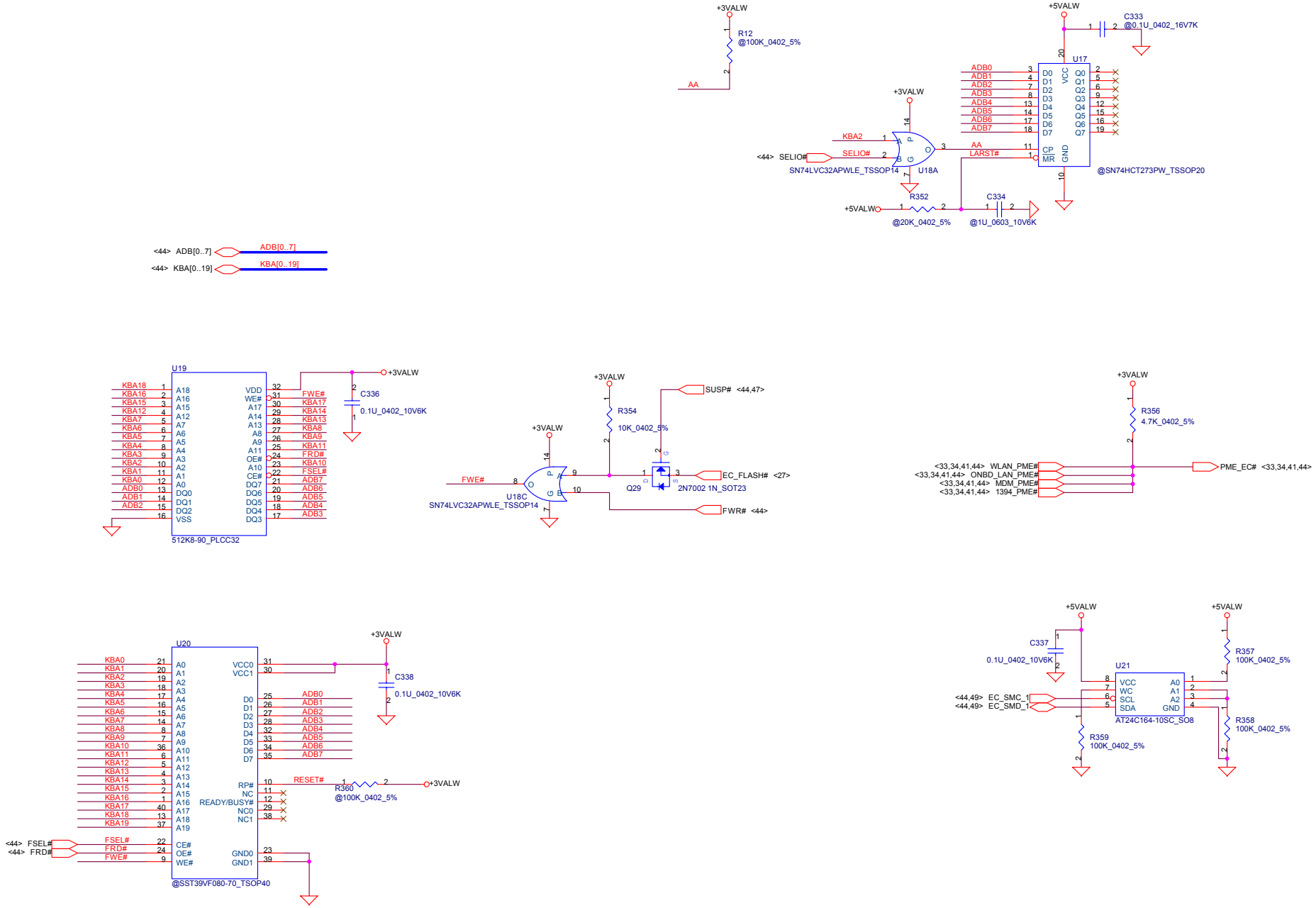

THIS SHEET OF ENGINEERING DRAWING IS THE PROPRIETARY PROPERTY OF COMPAL ELECTRONICS, INC. AND CONTAINS CONFIDENTIAL AND TRADE SECRET INFORMATION. THIS SHEET MAY NOT BE TRANSFERED FROM THE CUSTODY OF THE COMPETENT DIVISION OF R&D DEPARTMENT EXCEPT AS AUTHORIZED BY COMPAL ELECTRONICS, INC. NEITHER THIS SHEET NOR THE INFORMATION IT CONTAINS MAY BE USED BY OR DISCLOSED TO ANY THIRD PARTY WITHOUT PRIOR WRITTEN CONSENT OF COMPAL ELECTRONICS, INC.

Compal Electronics, Inc.

Title	BIOS & EC I/O Port	
Size	Document Number: LA-2411	Rev 0.1
Date: Tuesday, June 08, 2004	Sheet 45 of 65	

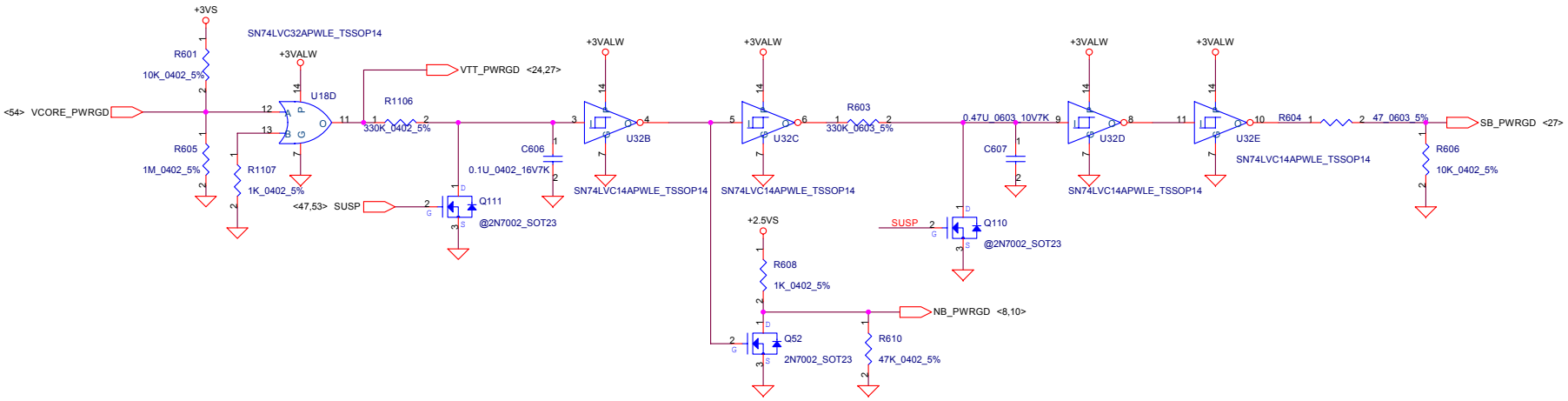

TV_OUT CONNECTOR

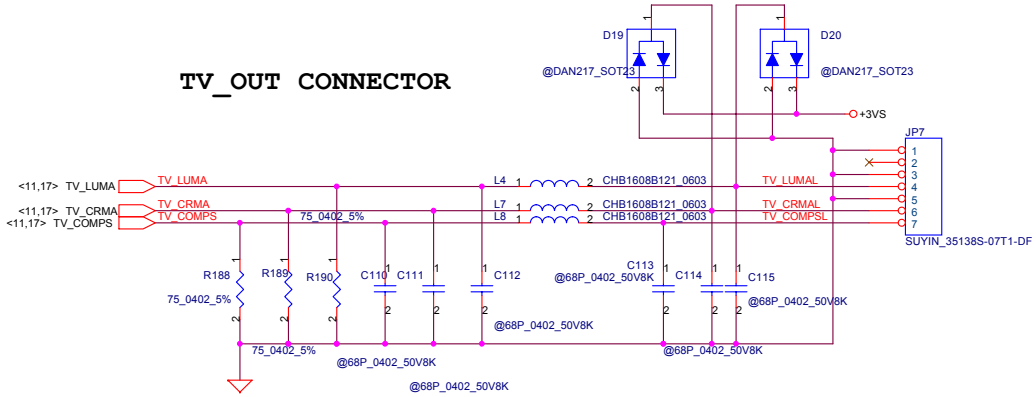

THIS SHEET OF ENGINEERING DRAWING IS THE PROPRIETARY PROPERTY OF COMPAL ELECTRONICS, INC. AND CONTAINS CONFIDENTIAL AND TRADE SECRET INFORMATION. THIS SHEET MAY NOT BE TRANSFERED FROM THE CUSTODY OF THE COMPETENT DIVISION OF R&D DEPARTMENT EXCEPT AS AUTHORIZED BY COMPAL ELECTRONICS, INC. NEITHER THIS SHEET NOR THE INFORMATION IT CONTAINS MAY BE USED BY OR DISCLOSED TO ANY THIRD PARTY WITHOUT PRIOR WRITTEN CONSENT OF COMPAL ELECTRONICS, INC.

Compal Electronics, Inc.			
Title	POWER GOOD & P/S2 CKT		
Size	Document Number LA-2411		Rev 0.1
Date: Tuesday, June 08, 2004	Sheet 46 of 65		

+2.5VALW to +2.5V Transfer

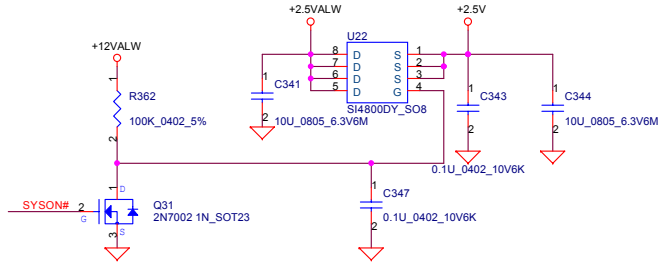

+2.5V to +2.5VS Transfer

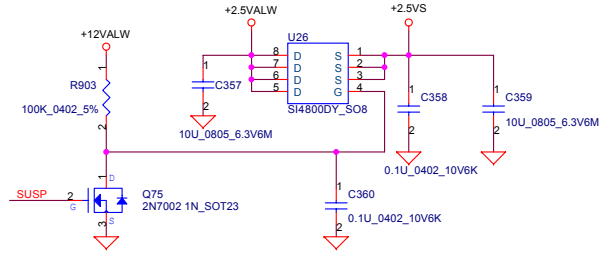

(0.5A(VGA)+0.83A(VGA_RAM)+0.14A(SB)=1.5A,60mils,)

+1.5VSP to +1.5VS Transfer

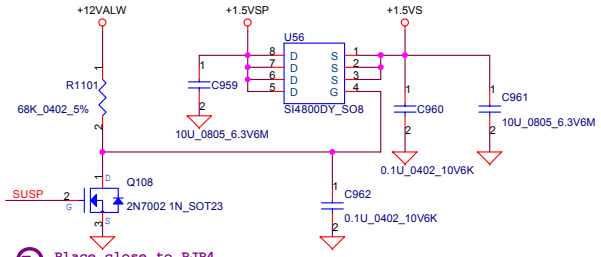

(6A,240mils ,Via NO.= 12)

+3VALW to +3V Transfer

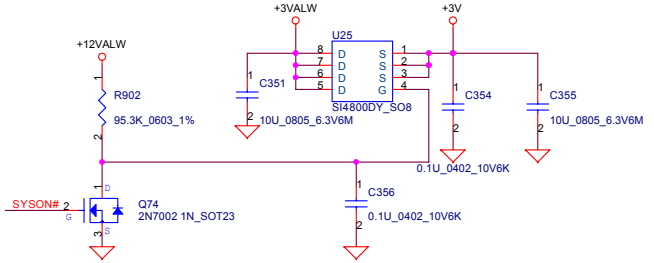

+3VALW to +3VS Transfer

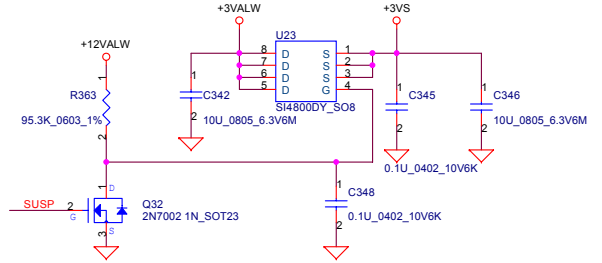

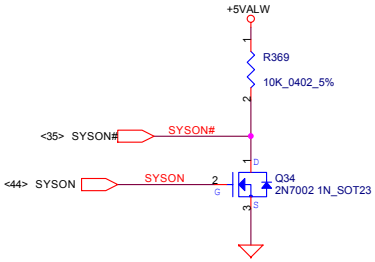

+5VALW to +5V Transfer

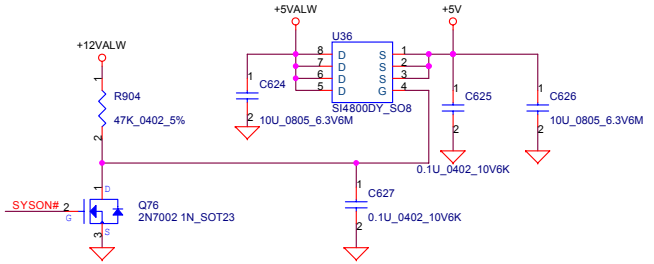

+5VALW to +5VS Transfer

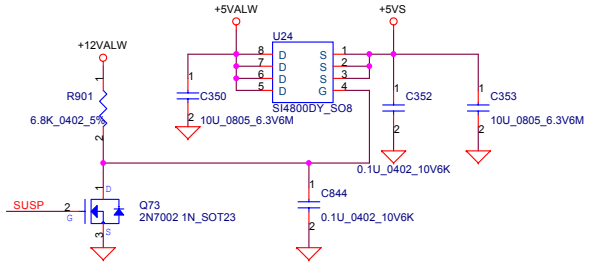

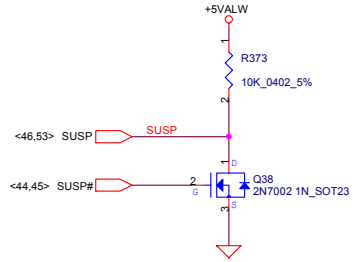

Discharge circuit

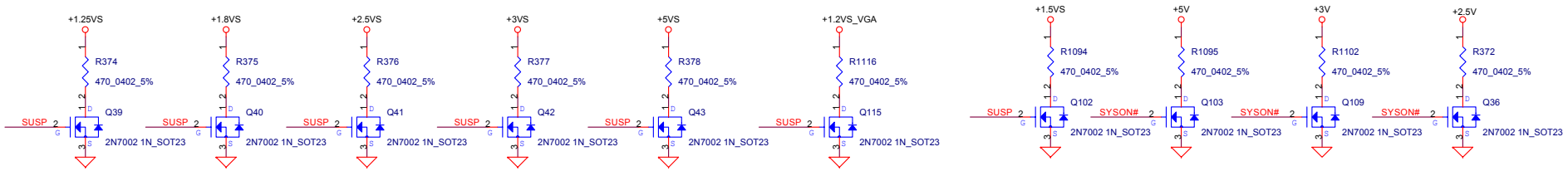

THIS SHEET OF ENGINEERING DRAWING IS THE PROPRIETARY PROPERTY OF COMPAL ELECTRONICS, INC. AND CONTAINS CONFIDENTIAL AND TRADE SECRET INFORMATION. THIS SHEET MAY NOT BE TRANSFERED FROM THE CUSTODY OF THE COMPETENT DIVISION OF R&D DEPARTMENT EXCEPT AS AUTHORIZED BY COMPAL ELECTRONICS, INC. NEITHER THIS SHEET NOR THE INFORMATION IT CONTAINS MAY BE USED BY OR DISCLOSED TO ANY THIRD PARTY WITHOUT PRIOR WRITTEN CONSENT OF COMPAL ELECTRONICS, INC.

Compal Electronics, Inc.	
Title	DC/DC Circuits
Size	Document Number: LA-2411 — Rev 0.1
Date: Tuesday, June 08, 2004	Sheet 47 of 65

Detector

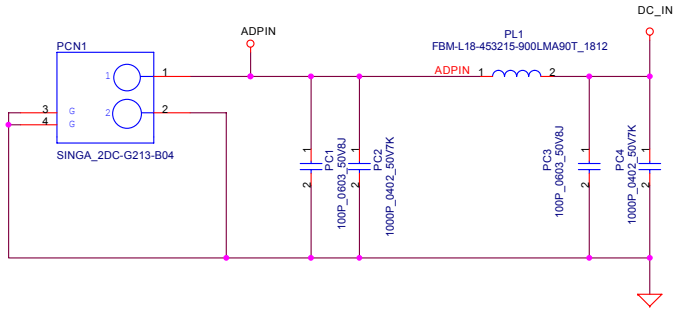

Vin Detector

18.234	17.841	17.449
17.597	17.210	16.813

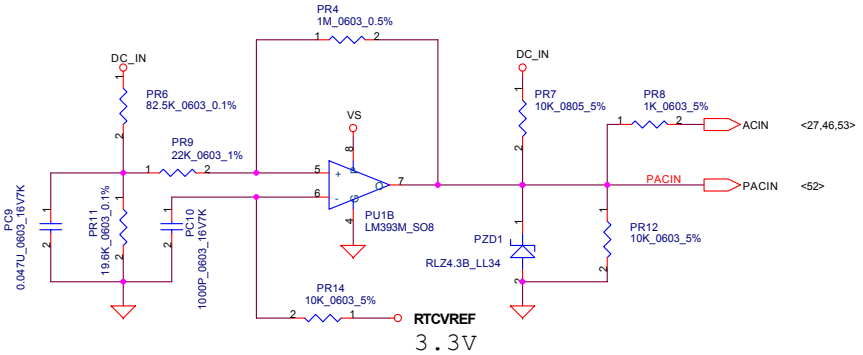

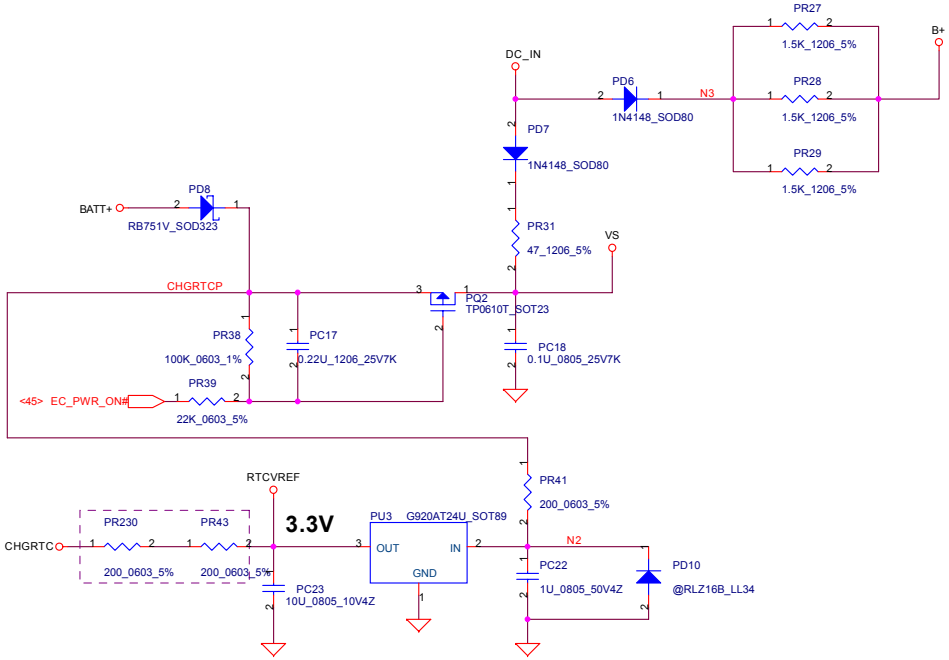

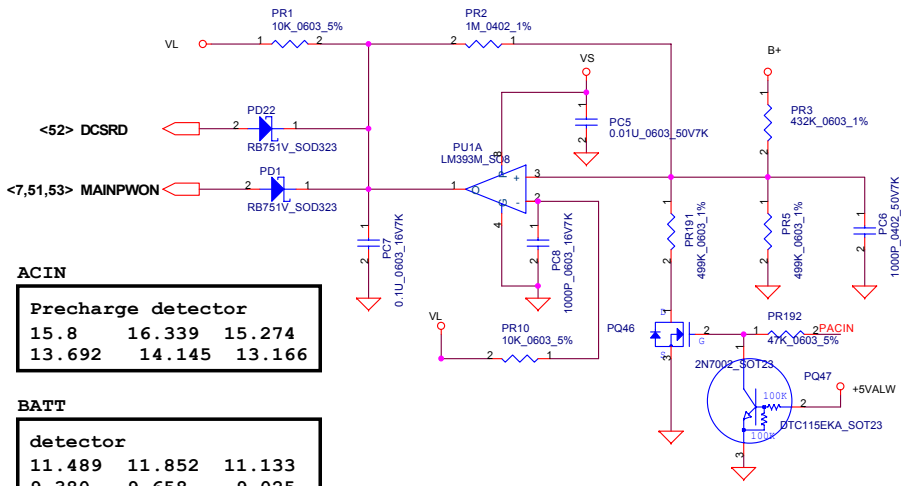

ACIN

Precharge detector

15.8	16.339	15.274
13.692	14.145	13.166

BATT

detector

11.489	11.852	11.133
9.380	9.658	9.025

THIS SHEET OF ENGINEERING DRAWING IS THE PROPRIETARY PROPERTY OF COMPAL ELECTRONICS, INC. AND CONTAINS CONFIDENTIAL AND TRADE SECRET INFORMATION. THIS SHEET MAY NOT BE TRANSFERED FROM THE CUSTODY OF THE COMPETENT DIVISION OF R&D DEPARTMENT EXCEPT AS AUTHORIZED BY COMPAL ELECTRONICS, INC. NEITHER THIS SHEET NOR THE INFORMATION IT CONTAINS MAY BE USED BY OR DISCLOSED TO ANY THIRD PARTY WITHOUT PRIOR WRITTEN CONSENT OF COMPAL ELECTRONICS, INC.

Compal Electronics, Inc.
Title: Detector
Size | Document Number | Rev 0.1
Date: Tuesday, June 08, 2004 | Sheet 48 of 65

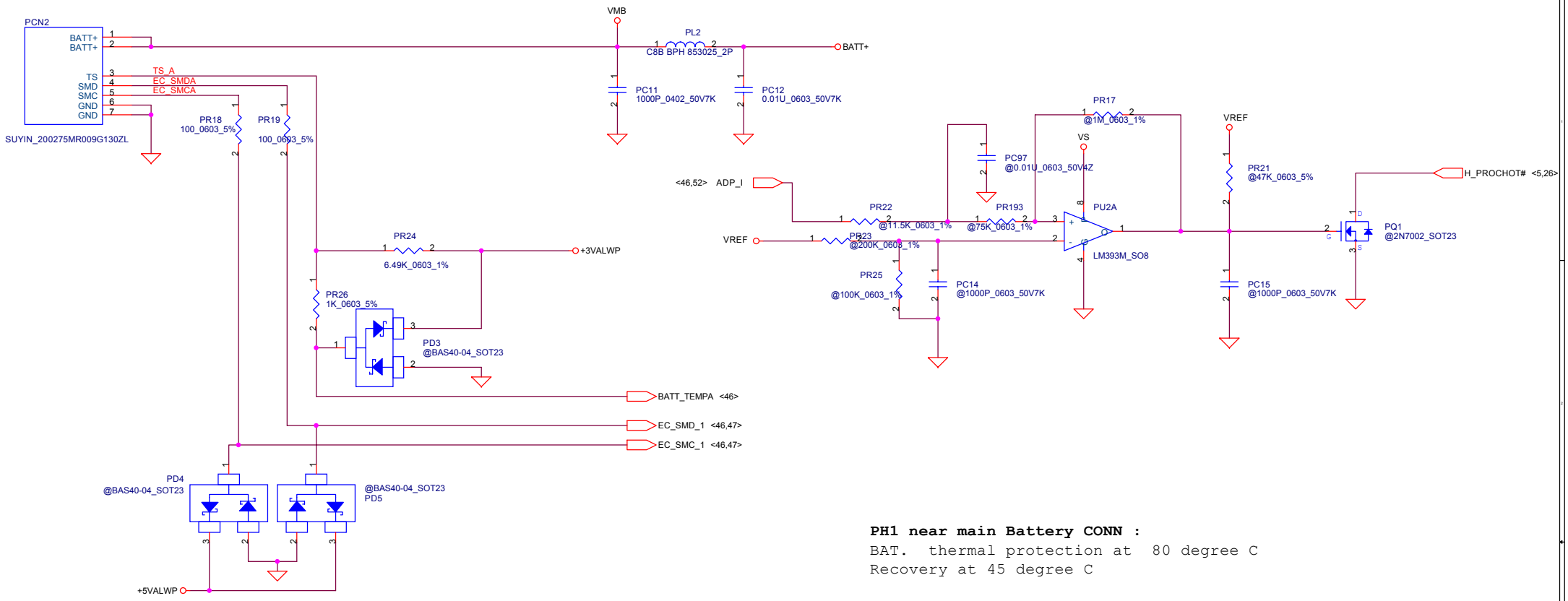

PH1 near main Battery CONN :

BAT. thermal protection at 80 degree C

Recovery at 45 degree C

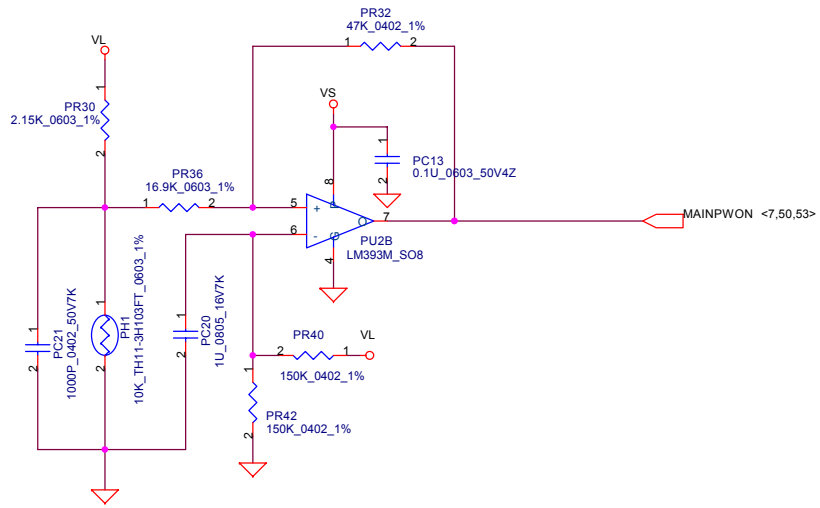

Compal Electronics, Inc.			
Title	**BATTERY CONN / OTP**		
Size	Document Number		Rev 0.1
Date: Tuesday, June 08, 2004	Sheet 49 of 65		

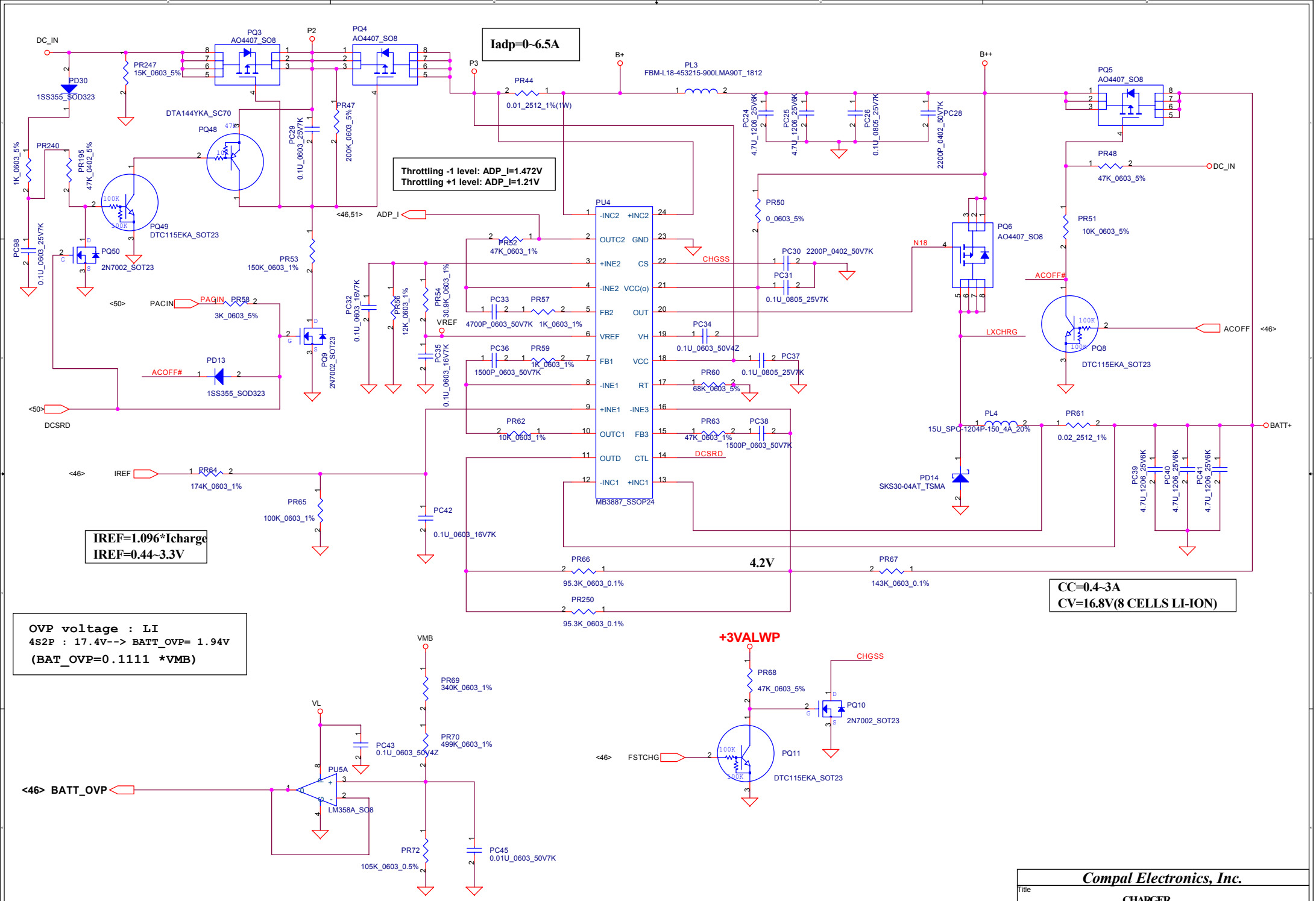
Iadp=0~6.5A
Throttling -1 level: ADP_I=1.472V
Throttling +1 level: ADP_I=1.21V
IREF=1.096*Icharge
IREF=0.44~3.3V
CC=0.4~3A
CV=16.8V(8 CELLS LI-ION)
OVP voltage : LI
4S2P : 17.4V--> BATT_OVP= 1.94V
(BAT_OVP=0.1111 *VMB)
DC_IN
PQ3 AO4407_SO8
PQ4 AO4407_SO8
PQ5 AO4407_SO8
PQ6 AO4407_SO8
PU4
MB3887_SSOP24
PL3 FBM-L18-453215-900LMA90T_1812
PL4 15U_SPC-1204P-150_4A_20%
PD14 SKS30-04AT_TSMA
PQ8 DTC115EKA_SOT23
PQ49 DTC115EKA_SOT23
PQ48 DTA144YKA_SC70
PQ50 2N7002_SOT23
PQ9 2N7002_SOT23
PD30 1SS355_SOD323
PD13 1SS355_SOD323
PU5A LM358A_SO8
PQ10 2N7002_SOT23
PQ11 DTC115EKA_SOT23
+3VALWP
VMB
VL
BATT+
B+
B++
P2
P3
N18
LXCHRG
CHGSS
DCSRD
ACOFF#
ACOFF
PACIN
VREF
ADP_I
IREF
FSTCHG
BATT_OVP
4.2V
Compal Electronics, Inc.
Title
CHARGER
Size
Document Number
Rev 0.1
Date: Tuesday, June 08, 2004
Sheet 50 of 65

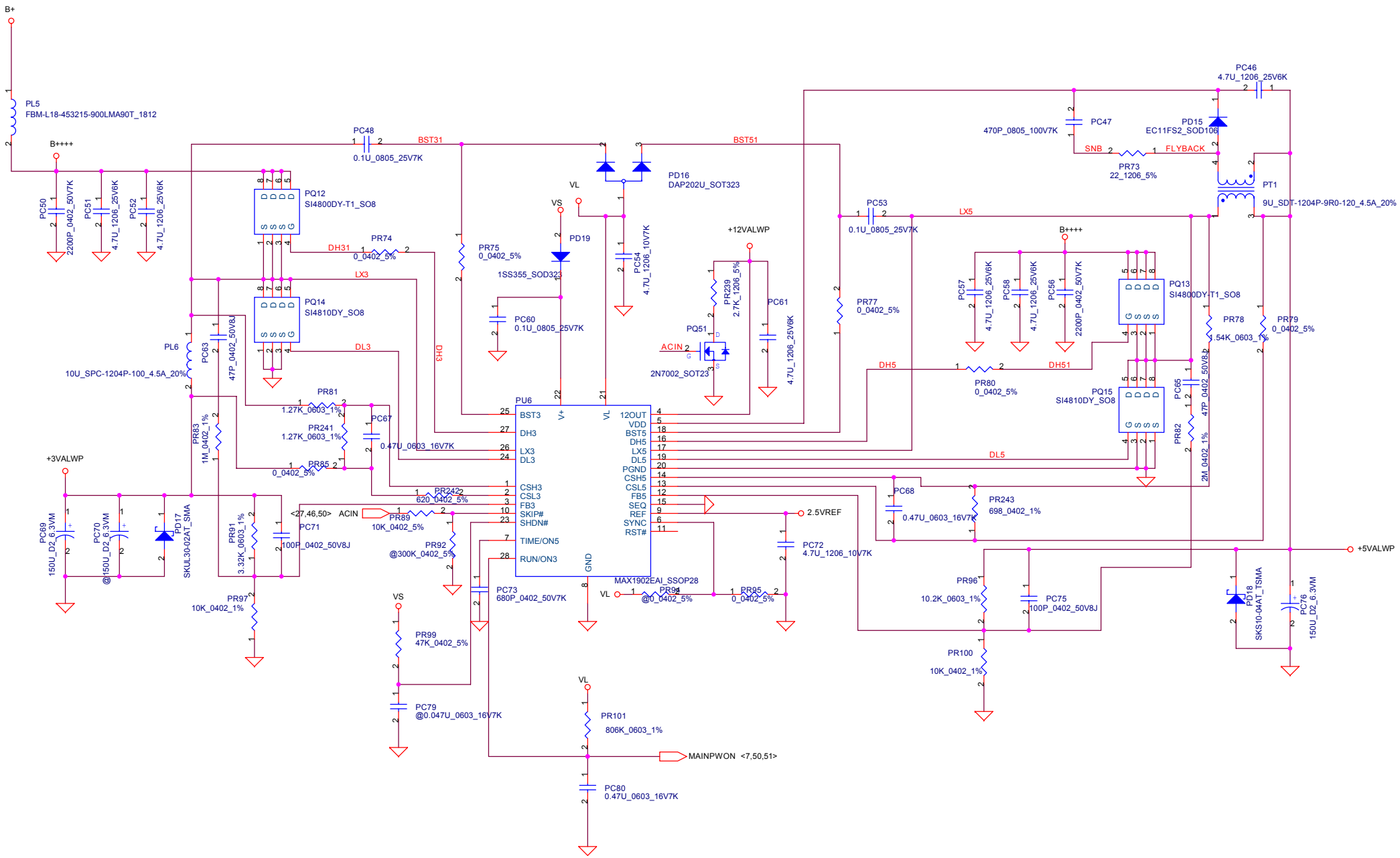

THIS SHEET OF ENGINEERING DRAWING IS THE PROPRIETARY PROPERTY OF COMPAL ELECTRONICS, INC. AND CONTAINS CONFIDENTIAL AND TRADE SECRET INFORMATION. THIS SHEET MAY NOT BE TRANSFERRED FROM THE CUSTODY OF THE COMPETENT DIVISION OF R&D DEPARTMENT EXCEPT AS AUTHORIZED BY COMPAL ELECTRONICS, INC. NEITHER THIS SHEET NOR THE INFORMATION IT CONTAINS MAY BE USED BY OR DISCLOSED TO ANY THIRD PARTY WITHOUT PRIOR WRITTEN CONSENT OF COMPAL ELECTRONICS, INC.

Compal Electronics, Inc.

Title: **5V/3.3V/12V**

Size | Document Number | Rev 0.1

Date: Tuesday, June 08, 2004 | Sheet 51 of 65

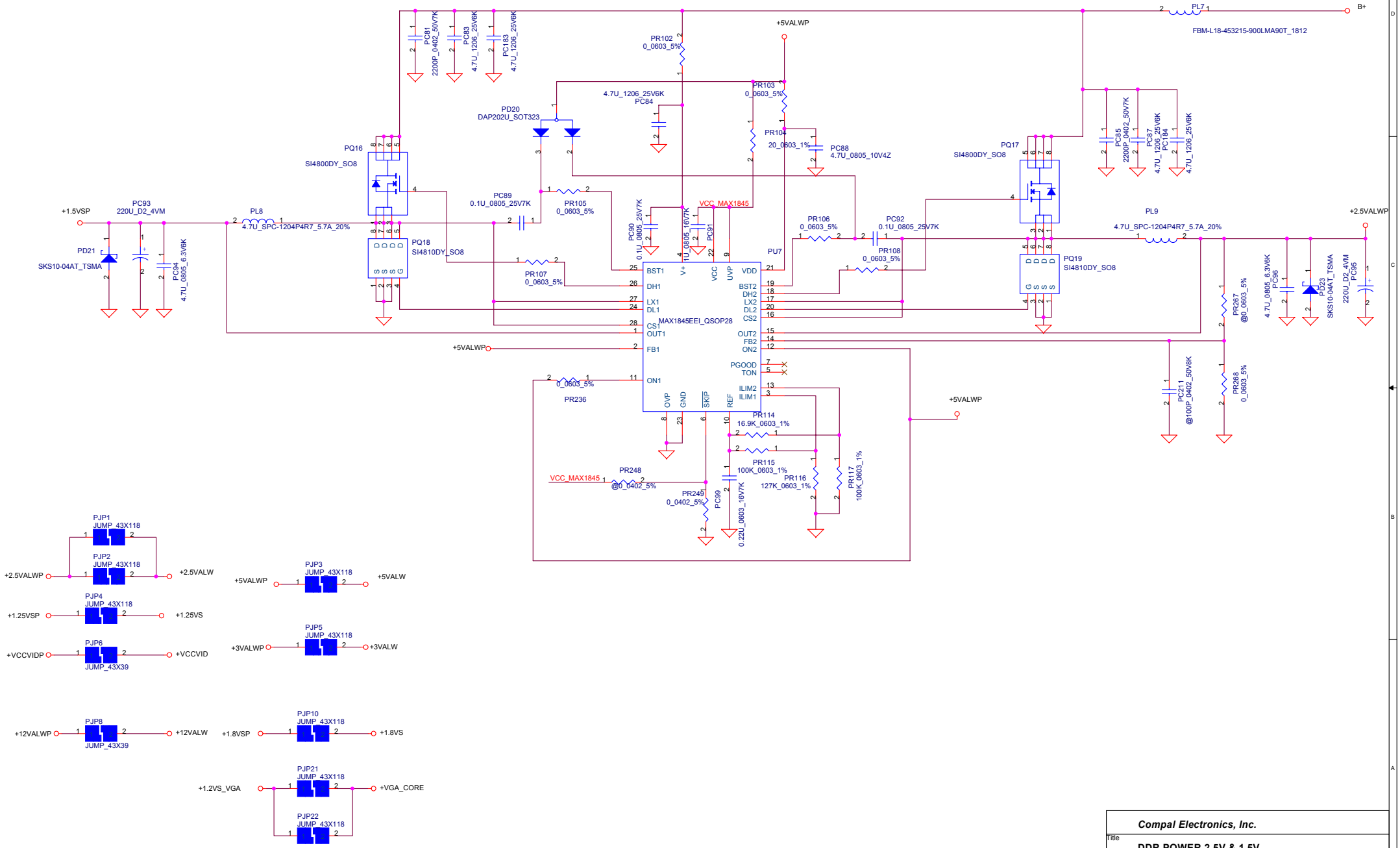

THIS SHEET OF ENGINEERING DRAWING IS THE PROPRIETARY PROPERTY OF COMPAL ELECTRONICS, INC. AND CONTAINS CONFIDENTIAL AND TRADE SECRET INFORMATION. THIS SHEET MAY NOT BE TRANSFERED FROM THE CUSTODY OF THE COMPETENT DIVISION OF R&D DEPARTMENT EXCEPT AS AUTHORIZED BY COMPAL ELECTRONICS, INC. NEITHER THIS SHEET NOR THE INFORMATION IT CONTAINS MAY BE USED BY OR DISCLOSED TO ANY THIRD PARTY WITHOUT PRIOR WRITTEN CONSENT OF COMPAL ELECTRONICS, INC.

Compal Electronics, Inc.

Title: **DDR POWER 2.5V & 1.5V**

Size	Document Number	Rev
B		0.1

Date: Tuesday, June 08, 2004 | Sheet 52 of 65

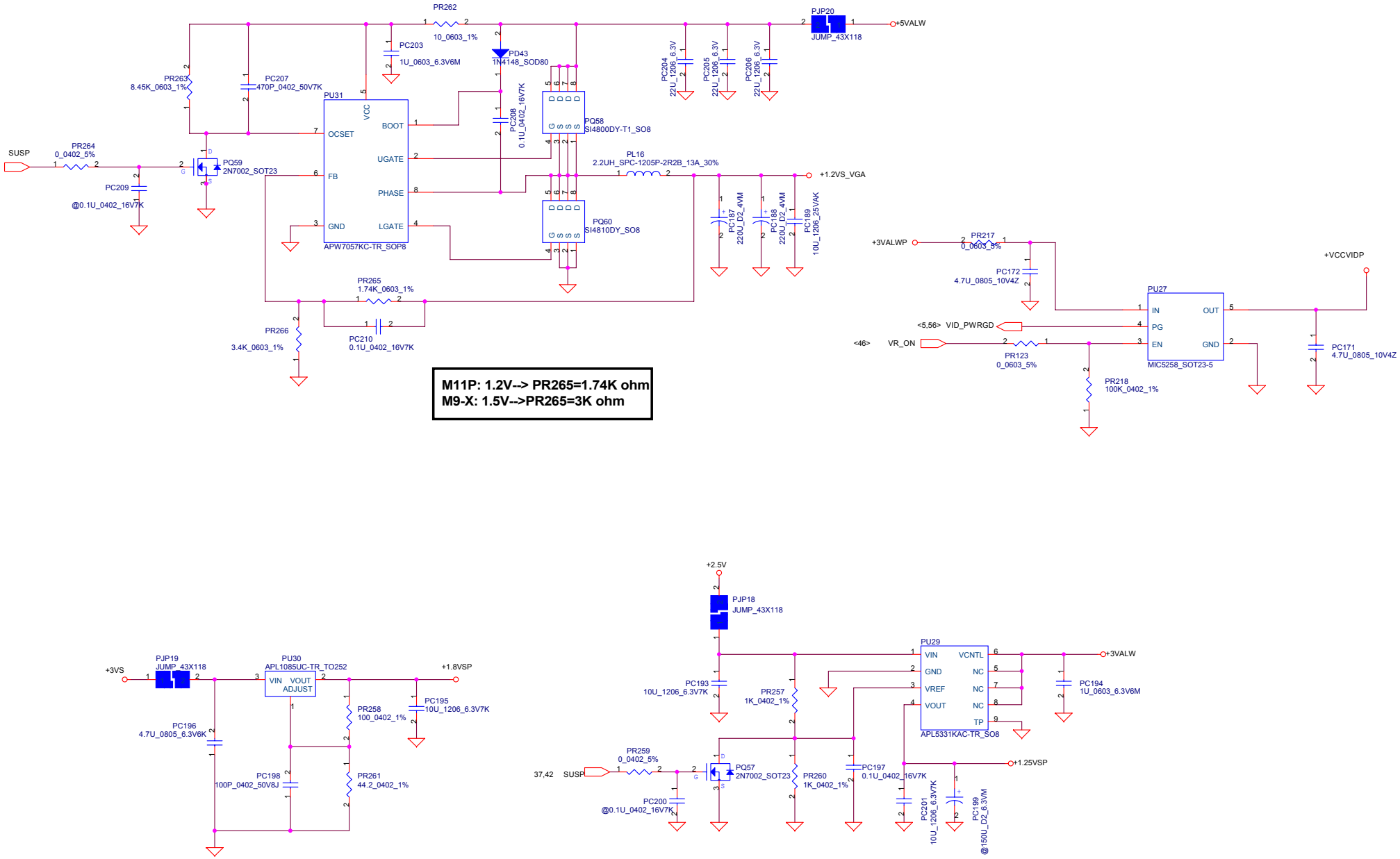

THIS SHEET OF ENGINEERING DRAWING IS THE PROPRIETARY PROPERTY OF COMPAL ELECTRONICS, INC. AND CONTAINS CONFIDENTIAL AND TRADE SECRET INFORMATION. THIS SHEET MAY NOT BE TRANSFERED FROM THE CUSTODY OF THE COMPETENT DIVISION OF R&D DEPARTMENT EXCEPT AS AUTHORIZED BY COMPAL ELECTRONICS, INC. NEITHER THIS SHEET NOR THE INFORMATION IT CONTAINS MAY BE USED BY OR DISCLOSED TO ANY THIRD PARTY WITHOUT PRIOR WRITTEN CONSENT OF COMPAL ELECTRONICS, INC.

Compal Electronics, Inc.

Title: VGA/1.8V/VCCVID/1.25V

Size: B | Document Number | Rev: 0.1

Date: Tuesday, June 08, 2004 | Sheet 53 of 65

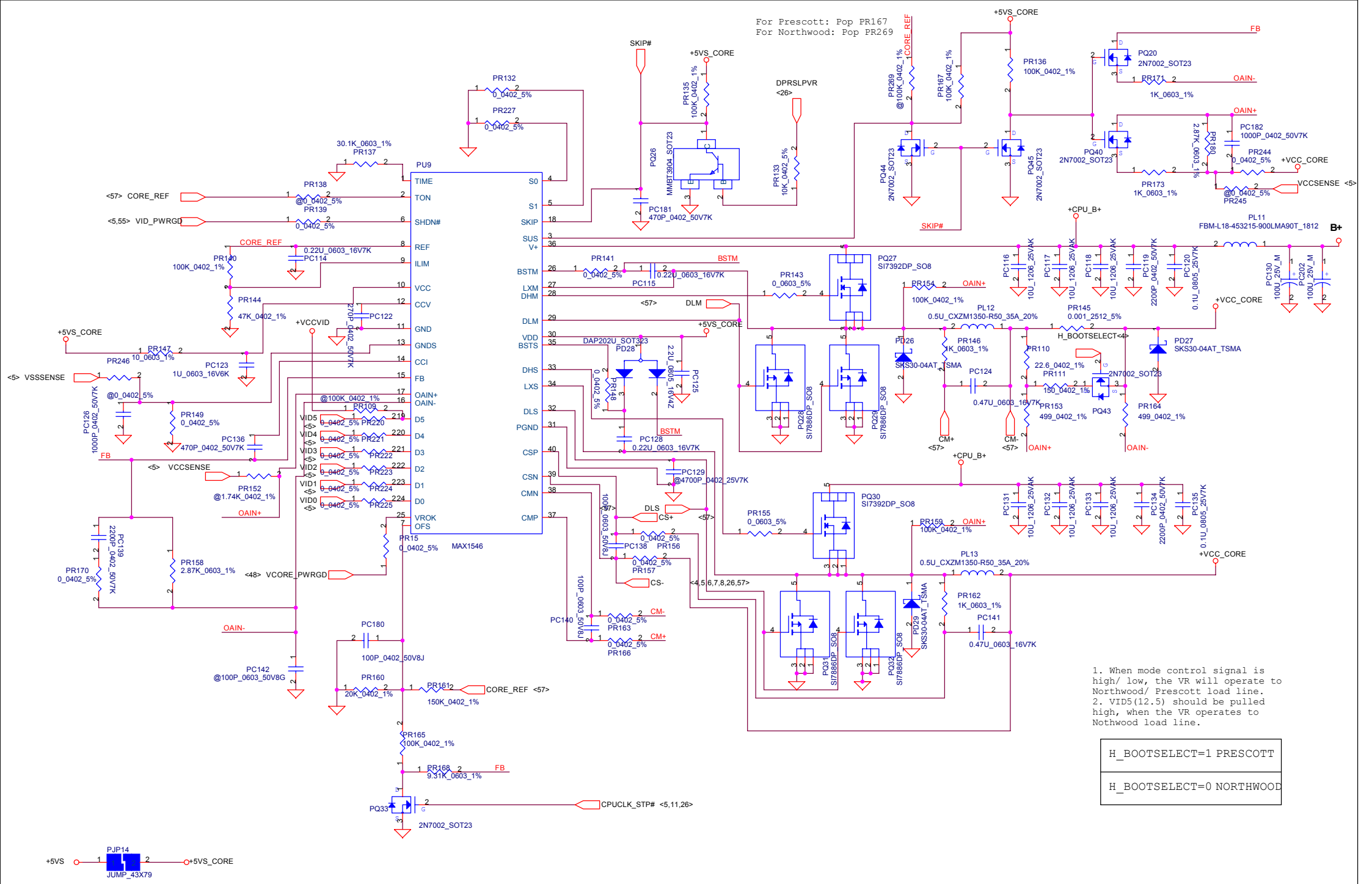
For Prescott: Pop PR167
For Northwood: Pop PR269
MAX1546
PU9
TIME
TON
SHDN#
REF
ILIM
VCC
CCV
GND
GNDS
CCI
FB
OAIN+
OAIN-
D5
D4
D3
D2
D1
D0
VROK
OFS
S0
S1
SKIP
SUS
V+
BSTM
LXM
DHM
DLM
VDD
BSTS
DHS
LXS
DLS
PGND
CSP
CSN
CMN
CMP
PQ27 SI7392DP_SO8
PQ28 SI7886DP_SO8
PQ29 SI7886DP_SO8
PQ30 SI7392DP_SO8
PQ31 SI7886DP_SO8
PQ32 SI7886DP_SO8
PL11 FBM-L18-453215-900LMA90T_1812
PL12 0.5U_CXZM1350-R50_35A_20%
PL13 0.5U_CXZM1350-R50_35A_20%
PQ20 2N7002_SOT23
PQ40 2N7002_SOT23
PQ43 2N7002_SOT23
PQ44 2N7002_SOT23
PQ45 2N7002_SOT23
PQ26 MMBT3904_SOT23
PQ33 2N7002_SOT23
PD26 SKS30-04AT_TSMA
PD27 SKS30-04AT_TSMA
PD28 DAP202U_SOT323
PD29 SKS30-04AT_TSMA
PJP14 JUMP_43X79
+5VS
+5VS_CORE
+CPU_B+
+VCC_CORE
+VCCID
B+
SKIP#
DPRSLPVR
CORE_REF
VID_PWRGD
VSSSENSE
VCCSENSE
VCORE_PWRGD
CPUCLK_STP#
CS+
CS-
CM+
CM-
DLM
DLS
BSTM
FB
OAIN+
OAIN-
H_BOOTSELECT
H_BOOTSELECT=1 PRESCOTT
H_BOOTSELECT=0 NORTHWOOD
1. When mode control signal is high/ low, the VR will operate to Northwood/ Prescott load line.
2. VID5(12.5) should be pulled high, when the VR operates to Nothwood load line.
Title CPU_CORE(1)
Size A3
Document Number
Rev 0.1
Date: Tuesday, June 08, 2004
Sheet 54 of 65

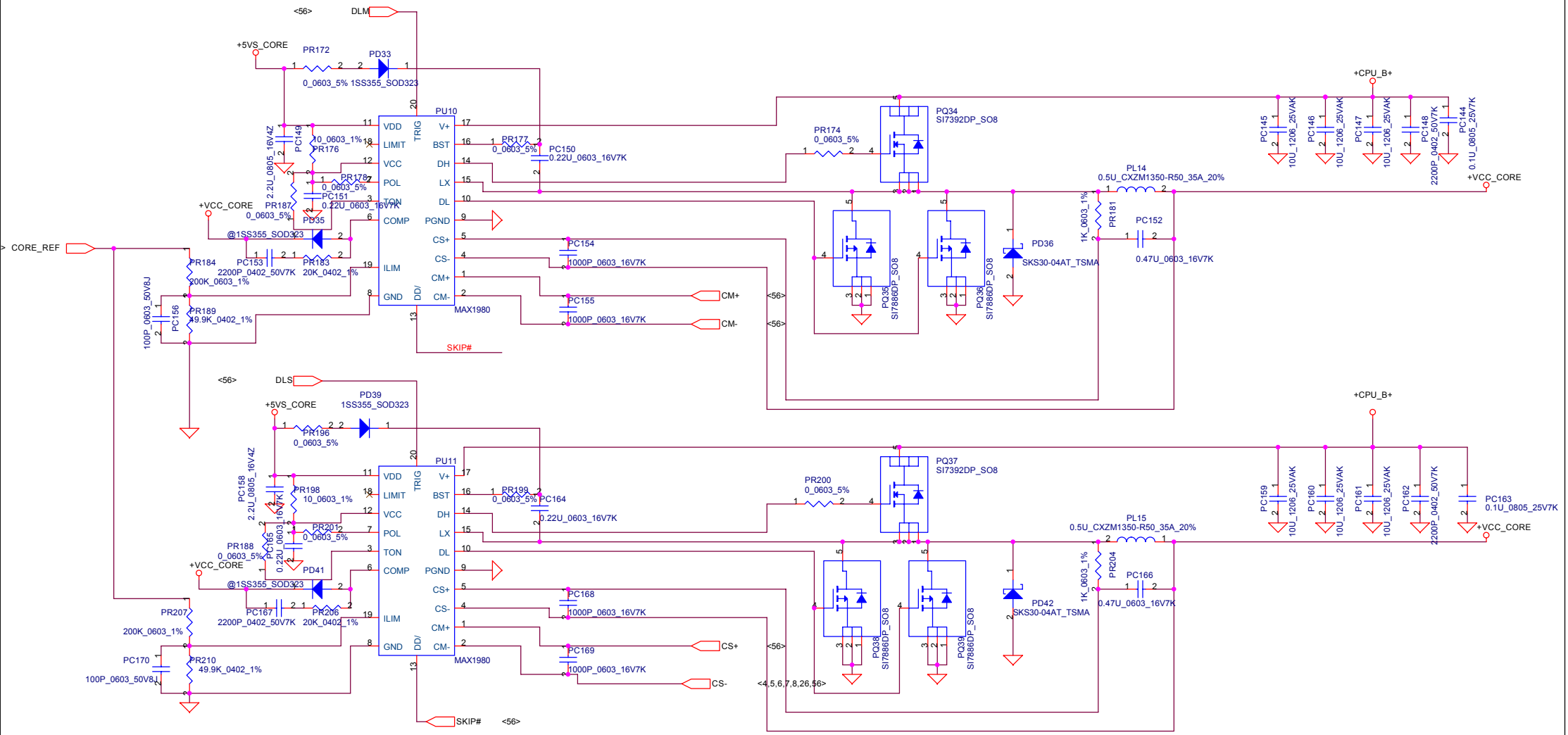

Compal Electronics, Inc.		
Title: +CPU_CORE(2)		
Size	Document Number	Rev 0.1
Date: Tuesday, June 08, 2004	Sheet 55 of 65	

Version Change List (P. I. R. List) for Power Circuit

Item	Page#	Title	Date	Request Owner	Issue Description	Solution Description	Rev.
1	54,55, 56,57	wrong layout pad	03/25/2003	Compal	wrong layout pad	change to correct layout pad on PU7, PU8, PU9, PU10, PU11, PU16 and PQ24	0.2
2	56	DPRSLPVR	03/25/2003	Compal	Reserve two resistors for voltage of Deep-sleeper mode	Reserver PR231, PR232, PR233, PR234 for deeper-sleeper mode voltage setting	0.2
3	56	CPU VR-Cont.	03/25/2003	Compal	Reserve a jumper for power consumption measurement	Add PJP14	0.2
4	57	CPU VR-Cont.	03/25/2003	Compal	Change the netname +5VS_CORE for power consumption measurement	Change Netname of +5VS_CORE	0.2
5	51	RTC charger	03/25/2003	Compal	use two resistors for RTC charger protection	Add PR230	0.2
6	55	1.2VS_VGA	03/25/2003	Compal	re-layout 1.2V_VGA requested by ME	re-located both PL10 and PQ21, PQ23 as well as 1.2VS_VGA related power circitry	0.2
7	55	1.2VS_VGA	03/26/2003	Compal	Reserve a jumper for power consumption measurement	Add PJP15	0.2
8	55	+1.25VSP	03/26/2003	Compal	Change power time-sequence of 1.25VSP input power	Change VD, and VDD of PU16 from +2.5VALWP to +2.5VS; Connect PR235.2 to +2.5VS add a resistor PR235 for Stand/By pin for test	0.2
9	54	+1.5VALWP	03/27/2003	Compal	Reserve Force PWM function of 1.5V/2.5V and add a PR236 for SUSP# signal	Add PR237, PR238 for force PWM function control, and add PR236 for SUSP# signal	0.2

BHR60 from DB-1 to DB-2 STEP LA-1811 REV:0.1 -> 0.2 Modify <92.03.17.~92.03.24. >

1.Add an independent power source for VGA chip because of ATI request . <Page 12> 92.03.17.
-Add U53(SI9185),C913,R1023,C912,C914 and related net . (Modify CKT,BOM&Layout)

2.Modify the Audio related schematic for Customer request . <Page 37> 92.03.17.
-Add Q101(2N7002);Del R948(2.2K_0402_5%);Modify R746(2.2K_0402_5%) . (Modify CKT,BOM&Layout)

3.Change the USB2.0 Controller chip from ATI to NEC and modify the net for Customer request . <Page 26,27,36,44> 92.03.18.
-Add U54(NEC_uPD720101F1-EA8),R1024~R1047,R1049,R1051,R1053,R1054,C915~C929, U55(AT24C02),RP147,RP148,R102,R1059,R1062;Del RP127 . (Modify CKT,BOM&Layout)
-Add R1048,R1050,R1052 . (Modify CKT&Layout)

4.Modify the Audio related schematic for Customer request . <Page 37,38> 92.03.20.
-Add R1063(39K_0603_1%);Del R768(0_1206_5%) . (Modify CKT,BOM&Layout)
-Change C894,C896 from 1U_0603_10V6K to 0.1U_0603_16V7K . (Modify CKT&BOM)
-Change R974 from @100K_0402_5% to 100K_0402_5% . (Modify CKT&BOM)
-Change R972 from 100K_0402_5% to @100K_0402_5% . (Modify CKT&BOM)
-Change JP41.3 from GNDA to +5VAMP. (Modify CKT&Layout)

5.Modify the MiniPCI and BlueTooth conn related schematic for Customer request . <Page 43,44> 92.03.21.
-Add R1083,R1084,R1085(@0_0402_5%) . (Modify CKT&Layout)
-Change R300 from 100_0402_5% to @100_0402_5% . (Modify CKT&BOM)

6.Modify the USB2.0 related for Compal ATI/NEC Dual Layout request . <Page 27,44> 92.03.21.
-Add R1069,R1070,R1072,R1073,R1074,R1076,R1077,R1078,R1092,R1093(NEC@0_0402_5%) . (Modify CKT,BOM&Layout)
-Change R976,R977,R978,R979,R982,R983 from 0_0402_5% to ATI@0_0402_5% and the net . (Modify CKT,BOM&Layout)
-Add R1071,R1075,R1090,R1091(ATI@0_0402_5%) . (Modify CKT&Layout)

7.Add De-coupling capacitor for AGP power pins on RC300M and VGA chip because of ATI request . <Page 10> 92.03.21.
-Add C937~C946,C862,C863,C865~C871(0.1U_0402_10V6K) . (Modify CKT,BOM&Layout)

8. Reserve the SMBus1/2 swap Resistors for ATI request . <Page 27> 92.03.23.
-Add RP150(0_0404_4P2R_5%) . (Modify CKT,BOM&Layout)
-Add RP149(@0_0404_4P2R_5%) . (Modify CKT&Layout)

9. Add the power source +5V and +1.5VS discharge circuit for ATI request . <Page 49> 92.03.23.
-Add R1094,R1095(470_0402_5%),Q102,Q103(2N7002 1N_SOT23) . (Modify CKT,BOM&Layout)

10. Modify the ON1 related to speed up the power sequence for ATI request . <Page 48,54> 92.03.23.
-Add R1096,R1097(10K_0402_5%),Q1043(2N7002 1N_SOT23),Q105(DTC124EK_SC59); Del PR113(47K),PC183(0.1U) . (Modify CKT,BOM&Layout)

11. Modify power source CAP.'s value by Brian . <Page 26,49> 92.03.24.
-Change C347,C360 from 0.1U_0402_10V6K to 3900P_0402_50V7K;C356,C348 from 0.01U_0402_16V7K to 2200P_0402_25V7K . (Modify CKT&BOM)
-Add C956(180P_0603_50V8J) . (Modify CKT,BOM&Layout)

12. Del Via Hole on schematic for ME modify . <Page 41> 92.03.24.
-Del H15(H_C374D295),H29(H_C197D91) . (Modify CKT,BOM&Layout)

13.Modify the MiniPCI and BlueTooth conn related for Customer request . <Page 43,44> 92.03.24.
-Change R1083,R1084 from @0_0402_5% to 100_0402_5% . (Modify CKT&BOM)
-Add C957(10U_0805_10V3M),C958(0.1U_0402_10V6K) . (Modify CKT,BOM&Layout)

14.Swap the USB20*P3* and USB20*P5* for Customer request . <Page 44> 92.03.24.
-Modify R1079~R1082,JP43,R980,R981's connection . (Modify CKT&Layout)

A-TEST SMT BUILT

15.Modify the schematic after rev0.1 debug by Brian . <Page 12,17,26,29> 92.03.24.
-Change R1010 from @0_0603_5% to 0_0603_5%;R1011 from 0_0603_5% to @0_0603_5%; Q15 from 2SC2411K_SOT23 to @2SC2411K_SOT23;R145 from 4.7K_0402_5% to @4.7K_0402_5%; R146 from @4.7K_0402_5% to 4.7K_0402_5%;R967 from @10K_0402_5% to 10K_0402_5%; R833 from @0_0402_5% to 0_0402_5% . (Modify CKT&BOM)

16.Modify the schematic H_BOOTSELECT related by Power Team . <Page 04> 92.03.25.
-Add Q106(2SC2411K_SC59),Q107(MMBT3904_SOT23),R1099,R1100(47K_0402_5%) . (Modify CKT,BOM&Layout)
-Change R899 from 0_0402_5% to 22K_0402_5%,R900 from @0_0402_5% to 100K_0402_5% . (Modify CKT&BOM)

17.Add a power transfer circuit to fix +1.5VS leakage issue . <Page 49> 92.03.25.
-Add U56(SI4800DY_SO8),Q108(2N7002 1N_SOT23),R1101(100K_0402_5%),C960(0.1U_0402_10V6K), C961(10U_1206_6.3V6M),C962(3900P_0402_50V7K) . (Modify CKT,BOM&Layout)

18. Modify power source Resistor and CAP.'s value for power sequence . <Page 49> 92.03.26.
-Change C347,C360,C962 from 3900P_0402_50V7K to 0.1U_0402_10V6K;C356,C348 from 2200P_0402_25V7K to 0.1U_0402_10V6K;C627,C844 from 1000P_0402_50V7K to 0.1U_0402_10V6K . (Modify CKT&BOM)
-Change R903,R362 from 100K_0402_5% to 91K_0402_5% . (Modify CKT&BOM)
-Change R902,R363 from 100K_0402_5% to 95.3K_0603_1% . (Modify CKT,BOM&Layout)

19. Modify the ON1 related to speed up the power sequence for ATI request by Brian/James/CT . <Page 48,54> 92.03.26.
-Del R1096,R1097(10K_0402_5%),Q1043(2N7002 1N_SOT23),Q105(DTC124EK_SC59) . (Modify CKT,BOM&Layout)

20. Add the power source +3VS discharge circuit by Brian . <Page 49> 92.03.26.
-Change Q42 from @2N7002 1N_SOT23 to 2N7002 1N_SOT23 . (Modify CKT&BOM)

21. Change the Resistor's value for ATI recommend . <Page 17 > 92.03.26.
-Change R264 from 169_0603_1% to 2N7002 1N_SOT23 . (Modify CKT&BOM)

22. Correct material layout footprint and pin define . <Page 26,34 > 92.03.26.
-Change Y1,Y3 PCB Footprint and JP32 pin define . (Modify CKT&Layout)

23. Add the power source +3V discharge circuit for ATI request . <Page 49> 92.03.27.
-Add R1102(470_0402_5%),Q109(2N7002 1N_SOT23) . (Modify CKT,BOM&Layout)

24. Change the power sequence related part's power source by Brian . <Page 5,37,48> 92.03.27.
-Change U32's power source from +3VS to +3VALW . (Modify CKT&Layout)

25. Modify the power sequence related schematic for timing by Brian . <Page 48> 92.03.27.
-Change R605 from 1M_0402_5% to @1M_0402_5%;C606 from 1U_0603_10V6K to @1U_0603_10V6K . (Modify CKT&BOM)
-Add Q110(2N7002_SOT23) . (Modify CKT,BOM&Layout)

26. Modify the SPDIF related schematic for Customer request . <Page 37,41> 92.03.28.
-Add R1103(0_0402_5%),C963(0.01U_0402_50V7K) . (Modify CKT,BOM&Layout)

27. Modify the NEC USB2.0 Controller Chip related schematic for Customer request . <Page 36> 92.03.28.
-Add Y7(30MHZ_30PPM),R1105(100_0402_5%),C964(12P_0402_50V8J),C965(10P_0402_50V8K) . (Modify CKT,BOM&Layout)
-Add R1104(@0_0402_5%) . (Modify CKT&Layout)
-Change R1024 from 0_0402_5% to @0_0402_5% . (Modify CKT&BOM)

28. Update the material's Layout Footprint for error correction . <Page 36> 92.03.28.
-Update JP29,JP14,SW1,SW3~SW8,JP40,Q65 . (Modify CKT&Layout)

29. Modify the related schematic after Brian Review <Page 7,24,26,29,30,39,43,45> 92.03.31.
-Del R288(56_0402_5%) . (Modify CKT,BOM&Layout)

30. Modify the related schematic after Layout check <Page 44> 92.03.31.
-Modify JP16(RJ11 Conn.).5 and JP16.6 from GND to NC . (Modify CKT&Layout)

31. Update the material's Layout Footprint for error correction . <Page 41> 92.04.02.
-Update JP40 . (Modify CKT&Layout)

32. Modify the schematic for cost down . <Page 10,12,26,37,> 92.04.04.
-Change to @(R1005,D79~D82,U53,C912,C913,R1023,Q98,R769,R771,) . (Modify CKT&BOM)

----PLEASE SEE NEXT PAGE

THIS SHEET OF ENGINEERING DRAWING IS THE PROPRIETARY PROPERTY OF COMPAL ELECTRONICS, INC. AND CONTAINS CONFIDENTIAL AND TRADE SECRET INFORMATION. THIS SHEET MAY NOT BE TRANSFERED FROM THE CUSTODY OF THE COMPETENT DIVISION OF R&D DEPARTMENT EXCEPT AS AUTHORIZED BY COMPAL ELECTRONICS, INC. NEITHER THIS SHEET NOR THE INFORMATION IT CONTAINS MAY BE USED BY OR DISCLOSED TO ANY THIRD PARTY WITHOUT PRIOR WRITTEN CONSENT OF COMPAL ELECTRONICS, INC.

BHR60 from DB-2 to SI-1 STEP LA-1811 REV:0.3 -> 0.4 EE Modify <92.04.08~92.04.18 >

1.1394 Connector JP33 Pin define sequence error. <Page 35> 92.04.08.
-Change JP33 sequence JP33.4->JP33.1, JP33.3->JP33.2, JP33.2->JP33.3, JP33.1->JP33.4. (Modify EE Circuit)

2.LED Circuit to Power Button(PRES)modify . <Page 42, Page 46> 92.04.09.
-Move Q66.1-R883-D56 -> Q62.1-R883-D56(PRES). (Modify EE Circuit)
-Rename Q62.2 net PWR_BACK# change to PWR_ACTIVE# connect to EC U15.119. (Modify EE Circuit)

3.Add +1.2VS_VGA Discharge Circuit. <Page 49> 92.04.09.
-Add +1.2VS_VGA Discharge Circuit(R1116 , Q115 to SUSP). (Modify EE Circuit)

4.Add 3VDDCDA & 3VDDCCL pull hing CRT_VCC circuit. <Page 25> 92.04.09.
-Add Q13.1-R1117 to +CRT_VCC & Q14.1-R1118 to CRT_VCC. (Modify EE Circuit)

5.PCMCIA U37 NET S1_CE2# & S1_CE1# Sweep. <Page 31> 92.04.09.

6. MDC(JP17) Net AC97_SData_In1/AC97_SData_In2 to AC97_Data_In. <Page 44> 92.04.10.
-Update BOM add R326. (Modify EE Circuit)

7. Change NB DDR Bus Net for basic on ATI NB DDR Bus Layout rule. <Page 9, 14, 15, 16> 92.04.11.
-Add R1122(DDRA_CKE_R3), R1121(DDRA_CKE_R2). (Modify EE Circuit)
-Del R399(DDRA_CS#0), R400(DDRA_CS#2). (Modify EE Circuit)

8. Check BOM USB OUVUR R893&R895 470K change to 330K. <Page 44> 92.04.12.

9. Add SUSP# pull Down. <Page 46> 92.04.14.
-Add EC U15.115 to SUSP# pull Down @R1123 to GND. (Modify EE Circuit)

10. Add CPUCLK_STP# pull High Circuit. <Page 26, 5> 92.04.14.
-BOM Q113 -> @ , Add R1124 to Q113.1 & Q113.3. (Modify EE Circuit)
-Add CPUCLK_STP# pull High @R1126 to +3VS . (Modify EE Circuit)
-Add CPUCLK_STP# serial resistor R1125 to Q96.2. (Modify EE Circuit)

11. Change BOM R585 75 -> 0 & R996 33 -> 68(REFCLK1_NB). <Page 11, 24> 92.04.15.

12. SIO Circuit All Power Plan +3V -> +3VS. <Page 39> 92.04.15.

13. Add NEC USB Corstralor U54.P19(SRMOD) pull Low. <Page 36> 92.04.16.
-Add USB Constralor U54.P19(SRMOD) pull Low R1127 to GND. (Modify EE Circuit)
-Update BOM R1046 -> @. (Modify EE Circuit)

14. Add @R1132 pull High +3V(RTS1#) & @RP153 pull High +3V(CTS1#/DSR1#/DCD1#/RI1#). <Page 39> 92.04.16.

15. Change BOM C364, C23, C24, C40, C798 47U -> 22U. <Page 8,28,41> 92.04.17.

16. Change BOM R380 430 -> 412(U27.A9/CPU_RSET#). <Page 8> 92.04.17.

17. Change BOM D57 HSMG-C170 -> 12-21SYGC/S530-E1, R1014 @ -> Del @. <Page 42> 92.04.17.

18. Change BOM C191 4.7U -> 2.2U. <Page 17> 92.04.17.

19. Change BOM C202,C931 10U -> 2.2U. <Page 20> 92.04.17.

20. Change BOM R636 100K-> @10K, R637 100K-> @10K, R665 -> @. <Page 33> 92.04.17.

21. Change MC_CD# - D44.3(SA_A25) -> D45.2, D44.2(SA_A22). <Page 33> 92.04.17.

22. Add R1135 -> VTT_PWRGD(U15.165). <Page 46> 92.04.18.

23. Add R1136, Q116, R1137, R1138 for pull High +3VS(CARD_LED#). <Page 42> 92.04.18.

24. Change BOM Q67 -> @, R884 -> @(CARD_LED#). <Page 42> 92.04.18.

25. Change BOM C966 22U -> 0.1U. <Page 18> 92.04.18.

26. Change BOM C916 -> @, C917 -> @. <Page 36> 92.04.18.

27. Change BOM R1019 -> @(U47.17 JS1) pull High. <Page 37> 92.04.18.

28. Change BOM R264 47 -> 137(U6.PM27 AGPTEST). <Page 17> 92.04.18.

BHR60 from DB-2 to SI-1 STEP LA-1811 REV:0.3 -> 0.4 Layout Modify <92.04.08~92.04.18 >

1.FDD Connector JP38 PCB Footprint error. <Page 40> 92.04.09.
-Check JP38 ACES_85201-2605_26P. (Modify Layout)

2.Power Switch U53 PCB Footprint error. <Page 12> 92.04.09.
-Change U53 SI9185_MLP33-8->MSOP8. (Modify Layout)

3.Crystal Y4 PCB Footprint error. <Page 11> 92.04.09.
-Change Y4 Y_TXC_6X1430004201_20P->KDS_DSX840GA. (Modify Layout)

4.USB Key Connector JP46 Part error. <Page 44> 92.04.09.
-Change JP46 S W-CONN ACES 85205-0400 4P P1.25(ACES_85205-0400_4P)->S H-CONN ACES 85201-0405 4P P1.0(ACES_85201-0405_4P). (Modify Layout)

5. Change BOM & Layout LED D57 Footprint . <Page 42> 92.04.15.
-Change D57 HSMG-C170 to LED_12-21SYGC_S530-E1_TR8. (Modify Layout)

6. Change Layout Keyboard Connector JP13 Footprint. <Page 45> 92.04.15.
-Change JP13 ACES_85201-2402_24P -> ACES_85201_2405_24P. (Modify Layout)

7. Change Layout FrontSideboard Connector JP42 Footprint. <Page 44> 92.04.15.
-Change JP42 ACES_85201-1402_14P -> ACES_85201_1405_14P. (Modify Layout)

----PLEASE SEE NEXT PAGE

THIS SHEET OF ENGINEERING DRAWING IS THE PROPRIETARY PROPERTY OF COMPAL ELECTRONICS, INC. AND CONTAINS CONFIDENTIAL AND TRADE SECRET INFORMATION. THIS SHEET MAY NOT BE TRANSFERED FROM THE CUSTODY OF THE COMPETENT DIVISION OF R&D DEPARTMENT EXCEPT AS AUTHORIZED BY COMPAL ELECTRONICS, INC. NEITHER THIS SHEET NOR THE INFORMATION IT CONTAINS MAY BE USED BY OR DISCLOSED TO ANY THIRD PARTY WITHOUT PRIOR WRITTEN CONSENT OF COMPAL ELECTRONICS, INC.

BHR60 from DB-2 to SI-1 STEP LA-1811 REV:0.3 -> 0.4 EE Modify <92.04.08.~92.04.18. >

29. Change U13.P1 <-> U13.P5, U14.P1 <-> U14.P5. <Page 43> 92.04.21.

30. Change R994.1 - AGP_DEVSEL# -> AGP_SBA1(DDC_DAT), R995.1 AGP_IRDY# -> AGP_SBA0(DDC_CLK). <Page 10> 92.04.21.

31. Add CLK_14M_APIC Terminte R,C @R1143 10/@C973 15P. <Page 26> 92.04.21.

32. Change SPR JP40 33,34 DOCKVIN -> GND , JP35,36 GND -> DOCKVIN, . <Page 41> 92.04.21.

33. Change BOM Q65 DTC124EK_SC59 -> MMBT3904_SOT23. <Page 41> 92.04.21.

34. Del @R1104, @R1089, @C953(CLK_SB_48M). <Page 36> 92.04.21.

35. Add @R1142 pull High(DOCK_LOUT_R). <Page 38> 92.04.21.

36. Add C971 & R1140 for VOLBTN+#, R1141 & C972 for VOLBTN-#, R1131 pull High +5VS, @R1139 pull High +3V. <Page 41> 92.04.21.

37. Add R520 @ -> Del @(JP8.AE26 COMPAT#). <Page 5> 92.04.23.

38. Change BOM R539, R540 61.9 -> 51.1 (JP8.L24/P1 COMP0/COMP1). <Page 5> 92.04.23.

39. Change BOM R553 100 -> 49.9, R558 169 -> 100. <Page 5> 92.04.23.

40. Change BOM R383 100 -> 49.9, R384 169 -> 100. <Page 8> 92.04.23.

41. Add R1001 @4.7K -> Del @, 100K pull Low(DPRSLPVR). <Page 26> 92.04.23.

42. Change BOM R40 @ -> Del @, R53 -> @. <Page 29> 92.04.23.

43. Change BOM R792 -> @, R795 @ -> Del @. <Page 39> 92.04.23.

44. Change BOM R230 -> @. <Page 4> 92.04.23.

45. EMI add R1144 for SSOUT. <Page 10> 92.04.24.

46. EMI change D73, D74, D75, D76 part. <Page 38> 92.04.24.

47. Add C974 pull Low for +NB_AGP. <Page 17> 92.04.24.

48. Change BOM R623 10K -> 0. <Page 25> 92.04.28.

49. Change BOM R622, R619 10K ->@. <Page 25> 92.04.28.

BHR60 SI STEP LA-1811 REV:0.4 EE MEN <92.04.28. >

1. Change C781 SE077106M00 -> SE054106Z10. <Page 39> 92.04.28.
2. Change C963 -> @. <Page 41> 92.04.28.
3. Change C974 -> @. <Page 17> 92.04.28.
4. Change C742 -> (SD028000000) 0 Ohm. <Page 37> 92.04.28.
5. Add R771 -> (SD028470100) 4.7K Ohm. <Page 37> 92.04.28.
6. Add C747 -> (SE070104Z00) 0.1U. <Page 37> 92.04.28.
7. DEL R761,R762 <Page 37> 92.04.28.

BHR60 from DB-2 to SI-1 STEP LA-1811 REV:0.3 -> 0.4 Layout Modify <92.04.08.~92.04.18. >

----PLEASE SEE NEXT PAGE

THIS SHEET OF ENGINEERING DRAWING IS THE PROPRIETARY PROPERTY OF COMPAL ELECTRONICS, INC. AND CONTAINS CONFIDENTIAL AND TRADE SECRET INFORMATION. THIS SHEET MAY NOT BE TRANSFERED FROM THE CUSTODY OF THE COMPETENT DIVISION OF R&D DEPARTMENT EXCEPT AS AUTHORIZED BY COMPAL ELECTRONICS, INC. NEITHER THIS SHEET NOR THE INFORMATION IT CONTAINS MAY BE USED BY OR DISCLOSED TO ANY THIRD PARTY WITHOUT PRIOR WRITTEN CONSENT OF COMPAL ELECTRONICS, INC.

BHR60 from SI-1 to DB(15.4") LA-1811 REV:0.4 -> 0.5 HW PIR
<92.05.07.~92.05.30. >

Item	Fixed Issue	Reason for change	PAGE	Modify List	M.B. Ver.
1		Prevent CPUCLK_STP# abnormal state happened	5	Change R1125 from 4.7K to 12K	0.5
			26	Delete R1126	
			29	Change R40 from 10K to 1K	
2		Prevent power leakage	7	Change the power of U8 from +3VS to +3VALW	0.5
3		Power saving	7	Change the power of Fans from +5VALW to +5VS	0.5
4		ATI recommendation	8	Add C974	0.5
5		Add VGA DRAM size detect function	17	Add R1149 for 128MB VGA DRAM (un-populate for 64MB)	0.5
6		Add CS1# for Hynix 8Mx32 VGA DRAM	18, 19, 22, 23	Add Nets: NMCSA1# and NMCSB1#	0.5
7		Change M9+X VGA_CORE from +1.5VS to individual power source	21	Delete JOPEN3	0.5
8		Delete useless components	5	Delete R538	0.5
			25	Delete C96	
			27	Delete Q114, Add R1145	
Update with Item23					
~~9~~		~~Solve power leakage from CRT~~	~~25~~	~~Change R619.1 and R622.1 net from +5VS to CRT_VCC~~	~~0.5~~
10		Prevent DPRSLPVR abnormal state happened	26	Change R1001 from 100K to 47K, R1002 from 0 to 47K	0.5
11		Using rechargeable RTC battery for HP's request	26	Delete D66, D71 and D72; Add D91 (BAS40-04, the same as LA-1761 D30); Change BATT1 from CR1220 to ML1220 (the same as LA-1761 BATT1)	0.5
12		Prevent +5V drop while plug SPR for HP's request	41	Change JP40.3, C798.1, C800.1 and C801.1 net from +5V to USB_VCCA; Change C798 from 22u to @10u; Change C801 from 1000p to @1000p	0.5
13		Enhance brightness of blue LEDs	42, 45	Delete Q67, R883, R884, R942 and R943; Add Q117 and R1146; Change R881, R882, R885, R888, R889, R890, R925 and R1136 to 220	0.5
			44	Change JP42.2 from BATLED_0 to BATLED_0#; Change JP42.7 from N.C. to +5VALW; Change JP42.12 from PAV_GND to PAV_LEDVCC; Change JP42.13 from PMLED_1 to PMLED_1#; Change JP42.14 from PAV_GND to +5VS; Change JP45.7 from PRES_GND to PRES_LEDVCC; Change JP45.8 from PRES_GND to +5VS	
14		Solve PWR_ACTIVE LED function fail issue	42	Change power from +3VS to +5V for PWR_ACTIVE LED (D52 and D56)	0.5
			46	Add R1147 and R1148; Change U15.76 net from N.C. to PWR_ACTIVE_PRES#; Change U15.87 net from N.C. to PRES_DETECT; Change U15.119 net from PWR_ACTIVE# to PWR_ACTIVE_PAV#	
15		Solve M10 can't power up issue	49	Change R1101 from 100K to 56K; Change R901 from 91K to 27K	0.5
16		Add discharge components	49	Add R372, R1095, R1102, Q36, Q103 and Q109	0.5
17		Material change for ME's request	44	Change JP47 from ACES_88231_0200 to MOLEX_53398_0290 (the same as LA-1761 JP2)	0.5
18		Using NEC USB2.0 to support BT for HP's request	44	Change R1082.2 net from USB3+ to USB5+; Change R1081.2 net from USB3- to USB5-	0.5
19		Increase MONO_IN voltage level	37	Change R738 from 2.4K to 10K	0.5
20		Decrease Audio AMP Gain	38	Change R971 from 100K to @100K; Change R973 from @100K to 100K	0.5

THIS SHEET OF ENGINEERING DRAWING IS THE PROPRIETARY PROPERTY OF COMPAL ELECTRONICS, INC. AND CONTAINS CONFIDENTIAL AND TRADE SECRET INFORMATION. THIS SHEET MAY NOT BE TRANSFERED FROM THE CUSTODY OF THE COMPETENT DIVISION OF R&D DEPARTMENT EXCEPT AS AUTHORIZED BY COMPAL ELECTRONICS, INC. NEITHER THIS SHEET NOR THE INFORMATION IT CONTAINS MAY BE USED BY OR DISCLOSED TO ANY THIRD PARTY WITHOUT PRIOR WRITTEN CONSENT OF COMPAL ELECTRONICS, INC.

BHR60 from SI-1 to DB(15.4") LA-1811 REV:0.4 -> 0.5
HW PIR <92.05.07.~92.05.30.>

Item	Fixed issue	Reason for change	PAGE	Modify List	M.B. Ver.
21		RTL8101L no need transistor for 3.3V to 2.5V anymore	34	Delete Q55, R944 and C668	0.5
		REALTEK recommendation		Change R704 from 5.6K_0402_5% to 5.6K_0402_1%	
22		Connector Spec. change for ME's request	44	Change PCB Footprint from SUYIN_020167MR004SX01ZR_4P to suyin_020167mr004s511zu_4p for JP18, JP19 and JP20	0.5
23		Solve Tr and Tf of H-sync/V-sync over Spec issue for high resolution CRT	25	Delete Q68, Q64, R619, R620, R621 and R612; Add U57, U58 and R1150	0.5
24		Delete useless components with BOM	10	Delete R574, R1086 and C952	0.5
			24	Delete R210 for UMA only	
25		Add SB to control H_PROCHOT# for HP's request	26	Add Q118 and R1151	0.5
26		Add components for EMI	37	Add R1152	0.5
			40	Add L65 ~ L78	
			40	Add L79 ~ L97	
27		Solve DOS cold-boot shunt down issue	7	Delete C256	0.5
28		Decrease overshoot & undershoot	25	Add R1153 and R1154	0.6
29		Change SB GPIO0 and GPIO2 pull-down to GND	26	Delete RP126; Add R1155~ R1157	0.6
30		Only 0603 size in SAP for 5.6K_1%	34	Change component size of R704 from 0402 to 0603	0.6
31		The pin-definition of FDD conn. was error on rev0.5 M/B	40	Correct the pin-definition for JP38	0.6
32		VIA recommendation	40	Change RP119 from 1K to 330; Delete RP121; Add R? and R?	0.6
33		Enhance brightness of Docking LEDs	41	Change R880 from 10K to 470	0.6
34		To support wake-up function with TP	44	Change TP power from +5VS to +5V	0.6
35		Delete useless components	5	Delete R535, R536, R991 and R992	0.6
			12	Delete U53, C912~C914, D79~D82, R954, R1010~R1012 and R1023	
			17	Delete Q15 and R251	
			20	Delete R1022	
			24	Delete R211 and R216	
			25	Delete C93~C95 and C930	
			26	Delete Q113, R1124 and D91; Add D93	
			27	Delete RP149, RP150, R1145 and Q114	
			29	Delete R53	
			37	Delete L45, R1019, Y6, R756, C740 and C741	
			38	Delete R1142	
			39	Delete RP153 and R1132	
36		To improve RTC accuracy	26	Change Y1 from +/-20ppm to +/-10ppm	0.6
37		Solve Cardbus controller can't reset well issue	31	Delete R905, R941 and C906; Connect U37.C11 to G_RST#	0.6
38		Add components for EMI	37	Add L98 and L99	0.6
			40	Add C975, C976, CP15~CP17	
39		Improve Audio quality	37	Delete C753~C756; Add R1165~R1168 and C979	0.6
			38	Add R1158 and R1164; Exchange the nets of JP41.2 and JP41.3	
			41	Add R1161	
40		Add components for ID & ME	42	Add D92	
41		Modify +5V power-up timing to lead +3V	49	Change R904 from 91K to 47K	

BHR60 from DB to SI LA-1811 REV:0.5 -> 0.6
HW PIR <92.06.20.~92.07.03.>

THIS SHEET OF ENGINEERING DRAWING IS THE PROPRIETARY PROPERTY OF COMPAL ELECTRONICS, INC. AND CONTAINS CONFIDENTIAL AND TRADE SECRET INFORMATION. THIS SHEET MAY NOT BE TRANSFERED FROM THE CUSTODY OF THE COMPETENT DIVISION OF R&D DEPARTMENT EXCEPT AS AUTHORIZED BY COMPAL ELECTRONICS, INC. NEITHER THIS SHEET NOR THE INFORMATION IT CONTAINS MAY BE USED BY OR DISCLOSED TO ANY THIRD PARTY WITHOUT PRIOR WRITTEN CONSENT OF COMPAL ELECTRONICS, INC.

BHR60 from SI-1 to PV LA-1811 REV:0.6 -> 0.7
HW PIR <92.07.03.~92.08.08. >

Item	Fixed Issue	Reason for change	PAGE	Modify List	M.B. Ver.
42		Correct Y1 and Y3 pin-out	26 46	Using pin-1 and pin-2 of these crystals	0.7
43		ATI Product Advisory, refer to PA_218IXP0T1	44	Delete R65, R66, R67, R70, R72, R75, R79, R82, R86. R89, R94 and R95	0.7
44		Solve CD-ROM audio noise issue	30	Delete C11	0.7
45		Solve audio noise issue	37	Change R733.1 from +5VS to +5VAMP_CODEC	0.7
46		For EMI	38	Add L100, L101, L102 and L103	0.7
47		For FIR detect	39	Add R1173(no fir) and R1174(with FIR)	0.7
48		ATI recommendation	27 46	Change RP12 from 10K to 2.2K Add R1175	0.7
49		Delete useless components	46	Delete D69 and D70	0.7
50		To support wake-up function with TP	46	Delete RP154; Add R1169, R1170, R1171 and R1172	0.7
51		Solve M10 can't power up issue	49	~~Delete C844~~ Change R901 from 27K to 6.8K	0.7
52		Improve Tr and Tf of H-sync/V-sync for high resolution CRT	25	Decrease the R,L,C value	0.7
53		Modify brightness of LEDs	42 45	Change Transistors from BJT to PMOS and Resisters value for Pav; Change Resisters value for Pre.	0.7
54		Fast power on for battery only	45	Change R306 from 100K to 470; Delete Q112	0.7
55		Improve contact		Move JP2(CD-ROM conn.) right 0.65mm	0.7
56		Correct Caps. LED and Numl. LED placement		Exchange the placement of these LEDs	0.7
57		Solve audio noise issue		Cut the bridge between AGND and DGND in GND1 layer	0.7
58		Reserve for EMI	37	Add JOPEN6, JOPEN7 and JOPEN8	0.7
59		Improve USB2.0 signal quality	36	Change R1027, R1029, R1030, R1031, R1032, R1033, R1034 and R1035 to 42.2	0.7
60		Reserve VRAM detect function for ATI recommendation	17	Connect R256/R257 to ZV_DATA0/ZV_DATA1, and pull-up to +3VS	1.0
61		For EMI	38 48 36 7 24 26 28 37 41 25	Change C761~C764 to 470pF and pull-down to D-GND; Change L100~L103 to MCK2012221YZT(2A) Delete C110~C115 Change L89, R1079 & R1080 to CHB1608U301 Add C855, C856, C907 and C908 Change L11 & L12 to MBV2012301YZT Change PCI clock damping resisters to 39 ohm Add C873~C881, C980~C983; Change R60~R62 to MBV2012301YZT Delete R769 & R770; Add C984~C992 & L104 Add L105 Add C993 & C994	1.0
62		Reduce GHI# "LOW" voltage level	5	Change R527 to 300 ohm	1.0
63		Fix "Pop" sound during boot up	37	Add C979	1.0
64		For PCBA skew reducing	42 45	Change R885, R888, R890, R1136 and R925 to 130	1.0
65		TI recommendation	32	Add R1177	1.0
66		Solve audio L/R swap issue	37 44	Change R750 & R753 to 27 ohm Delete R327 & C305	1.0
67		Improve NIC transmit return loss	34	Change U41 to NS0019	1.0

THIS SHEET OF ENGINEERING DRAWING IS THE PROPRIETARY PROPERTY OF COMPAL ELECTRONICS, INC. AND CONTAINS CONFIDENTIAL AND TRADE SECRET INFORMATION. THIS SHEET MAY NOT BE TRANSFERED FROM THE CUSTODY OF THE COMPETENT DIVISION OF R&D DEPARTMENT EXCEPT AS AUTHORIZED BY COMPAL ELECTRONICS, INC. NEITHER THIS SHEET NOR THE INFORMATION IT CONTAINS MAY BE USED BY OR DISCLOSED TO ANY THIRD PARTY WITHOUT PRIOR WRITTEN CONSENT OF COMPAL ELECTRONICS, INC.

BHR60 LA-1811 REV:1.0 ->1A
HW PIR

Item	Fixed Issue	Reason for change	PAGE	Modify List	M.B. Ver.
67		reserve Hynix DDR blue screen issue when boot to Win XP	16	Add R1180	1A
68		For EMI	43	Connect MiniPCI clamp (pin127 and pin128) to GND	1A
69		For EC NS97551 +3VALW undershoot issue	46	Add D94 and R1178	1A
70		Delete unnecessary component	46 47	Delete JP21 Delete JP22	1A
71		Reserve for when you connect the dock station cable in unit playing an audio occur a speaker switch	46	Add R1179 and C995	1A
72		The region is ME height limited zero	54	Delete PJP10 than short it directly	1A
73					
74					
75					
76					
77					
78					
79					
80					
81					
82					
83					
84					
85					
86					
87					
88					
89					
90					
91					

THIS SHEET OF ENGINEERING DRAWING IS THE PROPRIETARY PROPERTY OF COMPAL ELECTRONICS, INC. AND CONTAINS CONFIDENTIAL AND TRADE SECRET INFORMATION. THIS SHEET MAY NOT BE TRANSFERED FROM THE CUSTODY OF THE COMPETENT DIVISION OF R&D DEPARTMENT EXCEPT AS AUTHORIZED BY COMPAL ELECTRONICS, INC. NEITHER THIS SHEET NOR THE INFORMATION IT CONTAINS MAY BE USED BY OR DISCLOSED TO ANY THIRD PARTY WITHOUT PRIOR WRITTEN CONSENT OF COMPAL ELECTRONICS, INC.

Version Change List (P. I. R. List) for Power Circuit

Item	Page#	Title	Date	Request Owner	Issue Description	Solution Description	Rev.
1	54,55, 56,57	wrong layout pad	03/25/2003	Compal	wrong layout pad	change to correct layout pad on PU7, PU8, PU9, PU10, PU11, PU16 and PQ24	0.2
2	56	DPRSLPVR	03/25/2003	Compal	Reserve two resistors for voltage of Deep-sleeper mode	Reserver PR231, PR232, PR233, PR234 for deeper-sleeper mode voltage setting	0.3
3	56	CPU VR-Cont.	03/25/2003	Compal	Reserve a jumper for power consumption measurement	Add PJP14	0.3
4	57	CPU VR-Cont.	03/25/2003	Compal	Change the netname +5VS_CORE for power consumption measurement	Change Netname of +5VS_CORE	0.3
5	51	RTC charger	03/25/2003	Compal	use two resistors for RTC charger protection	Add PR230	0.3
6	55	1.2VS_VGA	03/25/2003	Compal	re-layout 1.2V_VGA requested by ME	re-located both PL10 and PQ21, PQ23 as well as 1.2VS_VGA related power circitry	0.3
7	55	1.2VS_VGA	03/26/2003	Compal	Reserve a jumper for power consumption measurement	Add PJP15	0.3
8	55	+1.25VSP	03/26/2003	Compal	Change power time-sequence of 1.25VSP input power	Change VD, and VDD of PU16 from +2.5VALWP to +2.5VS; Connect PR235.2 to +2.5VS add a resistor PR235 for Stand/By pin for test	0.3
9	54	+1.5VALWP	03/27/2003	Compal	Reserve Force PWM function of 1.5V/2.5V and add a PR236 for SUSP# signal	Add PR237, PR238 for force PWM function control, and add PR236 for SUSP# signal	0.3
10	54	+1.5VALWP	04/16/2003	Compal	change 1.5V time sequence	Change power time-sequence of 1.5VSP input power	0.4
11	56	CPU DPRSLPVR	04/16/2003	Compal	Change DPRSLPVR design	Add two transistor PQ44,PQ45 for voltage of Deep-sleeper mode	0.4
12	54 55 56	PWR JUMP	04/16/2003	Compal	For DFX issuse	Change power JUMP SIZE to follow new jump role	0.4
13	56	CPU DPRSLPVR	04/18/2003	Compal	Change DPRSLPVR design	Reserve DPRSLPVR function and add a PR136 for +5VS_CORE signal	0.4
14	50	Vin DETECTOR	04/30/2003	Compal	to make ACIN to enable to pull low	Change PR8 form 10k_0603 to 0K_0603	0.4
15	50	Precharge	04/30/2003	Compal	BOM error	Change PR1 from 10k_0603 to 100k_0603	0.4
16	51	Battery OTP	04/30/2003	Compal	To change feekbeck time	Change PC20 from .22u to 1u ;PR40&PR42 from 100k to 150k; PC80 from 1u to .47u	0.4
17	51		04/30/2003	Compal	change component	Change PU3 from S-81233SGUP-T1 to S-812C33AUA-C2N	0.4
18	52	Battery_OVP	04/30/2003	Compal	To avoide the BATT_OVP output to oscillate	Delet PC44&PR71	0.4
19	53	5V/3.3V/12V	04/30/2003	Compal	BOM error	Change PD16 from EC31Q04 to EC11FS2	0.4
20	53	5V/3.3V/12V	04/30/2003	Compal	To improve the 3V output ripple Voltage	Delet PC77	0.4

Version Change List (P. I. R. List) for Power Circuit

Item	Page#	Title	Date	Request Owner	Issue Description	Solution Description	Rev.
21	55	1.2VS_VGA	04/30/2003	Compal	BOM errors	Change PR121 from 511k to 180k;PR122 form 9.09k to 4.64k	0.4
22	50	Precharge detector	05/16/2003	Compal	System can't power on by battery	Add PR191(909K_0603),PR192(47k_0603),PRPQ46(2N7002)&PQ47(DTC115EUA_SC70) Change PR5 from 150k to 180k	0.5
23	51	Colok THROTTLING	05/16/2003	Compal	To modify the circuit	Add PR193(73.2k) ,PC97(0.01U_0603); change PR22 form 84.5K to 11.5K	0.5
24	56,57	CPU_CORE(1&2)	05/16/2003	Compal	Change the freqeuce 300k to 200k	delet PR138 ; add PR187(0_0603)&PR188(0_0603)	0.5
25	52	Charger	05/16/2003	Compal	To modify the charger circuit	Add PR194(1K) ,PC98(0.1U_0603),PR195(47K),PQ48(DTA144EUA),PQ49(DTC115EUA),PQ50(2N7002),PD30(1SS355)	0.5
26	55	1.2VS_VGA	05/16/2003	Compal	To modify the circuit for 1.2VS_VGA &1.5VS_VGA	add PR124(11.5k_0603)	0.5
27	53	3V/5V/12V	07/4/2003	Compal	To modify the DCR sense	Add PR81(3.4k) ,PR78(3.4K),PR79(0_0402) ,PR85(0_0402),PC67(0.1U_0603) ,PC68(0.1U_0603);delet PR86,PR88,PR90,PR93	0.6
28	56	CPU_CORE	07/4/2003	Compal	To modify THE CPU Load line form -1.5mV/A to -2.2mV/A	Change PR158,PR180 from 2k to 3.4k	0.6
29	56,57	CPU_CORE(1&2)	07/4/2003	Compal	To improve the CPU_CORE effecient	Change PL12,PL13,PL14,PL15 from TOHO to PANASONIC	0.6
30	50	DC_in	08/4/2003	Compal	For Gibson issue ,add two schottky diodes	add PD43(SBM1040-13_powermite3) ,PD44(SBM1040-13_powermite3)	0.7
31	52	Charger	08/4/2003	Compal	To modify the Precharge circuit	Add PD30(1SS355_SOD323) ,PC98 (0.1U_0603),PR195(47K_0402),PQ49(DTC115EUA_	0.7
32	53	3V/5V/12V	08/4/2003	Compal	To solve the DCR sense for 5V OCP issue	change PR81(1.27k) ,PR78(1.54K),PR79(0_0402) ,PR85(0_0402),PC67(0.47U_0603) ,PC68(0.47U_0603);add PR241(1.24k),PR242(620 ohm),PR243(698 ohm)	0.7
33	56	CPU_CORE	08/4/2003	Compal	To modify THE CPU Load line form -2.2mV/A to -1.5mV/A, and senes CPU VCC and VSS	Change PR158,PR180 from 3.4k to 2.2k and add PR244 (0 ohm) and PR245(0 ohm)	0.7
34	52	Charger	08/4/2003	Compal	To improve the charger feedback loop for charger noise issue	Change PR52 (47k_0603),PR57(1K_0603),PC36(1500P_0603)	0.7
35	52		2004.05.31		change 2.5V from fix to adjust	Add pr267, PR268 and PC211	

Compal Electronics, Inc.	
Title	Changed-List History-1
Size	Document Number: LA-2411 — Rev 0.1
Date: Tuesday, June 08, 2004	Sheet 65 of 65